LÜ 1.5

TEKTRONIX®

7B70
TIME BASE

SN B205000 AND UP

INSTRUCTION MANUAL

Tektronix, Inc.
P.O. Box 500
Beaverton, Oregon 97005

Serial Number B[redacted]

070-1579-00

WARRANTY

All TEKTRONIX instruments are warranted against defective materials and workmanship for one year. Any questions with respect to the warranty should be taken up with your TEKTRONIX Field Engineer or representative.

All requests for repair and replacement parts should be directed to the TEKTRONIX Field Office or representative in your area. This will assure you the fastest possible service. Please include the instrument Type Number or Part Number and Serial Number with all requests for parts or service.

Specifications and price change privileges reserved.

Copyright © 1973 by Tektronix, Inc., Beaverton, Oregon. Printed in the United States of America. All rights reserved. Contents of this publication may not be reproduced in any form without permission of Tektronix, Inc.

U.S.A. and Foreign TEKTRONIX products covered by U.S. and foreign patents and/or patents pending.

TEKTRONIX is a registered trademark of Tektronix, Inc.

TABLE OF CONTENTS

		Page
SECTION 1	SPECIFICATIONS	
	Introduction	1-1
	Electrical Characteristics	1-1
	Sweep Rate	1-1
	Sweep Accuracy	1-1
	Sweep Length	1-1
	Sweep Hold-Off Time	1-1
	External Horizontal Amplifier	1-1
	Deflection Factor	1-1
	Frequency Response	1-2
	Trigger Sensitivity	1-2
	Internal Trigger Jitter	1-2
	External Trigger Input	1-2
	P-P Auto Sensitivity	1-2
	Environmental Characteristics	
	Altitude	1-2
	Physical Characteristics	
	Finish	1-2
	Dimensions	1-2
	Weight	1-2
SECTION 2	OPERATING INSTRUCTIONS	
	General	2-1
	Installation	2-1
	Front Panel Controls	2-1
	Test Setup Chart	2-4
	General Operating Information	2-4
	Sweep Calibration Check	2-4
	Simplified Operating Instructions	2-4
	Normal Sweep	2-6
	Magnified Sweep	2-6
	Delayed Sweep	2-6
	Pushbutton Switch Logic	2-6
	Triggered Light	2-6
	Trigger Mode	2-7
	Trigger Coupling	2-8
	Trigger Source	2-9
	Trigger Slope	2-10
	Trigger Level	2-10
	Horizontal Sweep Rate	2-10
	Sweep Magnifier	2-12
	Horizontal Position Control	2-12
	Display Mode	2-12

TABLE OF CONTENTS (cont)

SECTION 2	OPERATING INSTRUCTIONS (cont)	Page
	Applications	2-13
	General	2-13
	Frequency Comparison	2-13
	Time Duration Measurements	2-14
	Determining Frequency	2-15
	Risetime Measurements	2-15
	Delayed Sweep Time Measurements	2-16
	Delayed Sweep Magnification	2-17
	Displaying Complex Signals Using Delayed Sweep	2-18
	Pulse Jitter Measurements	2-18
	X-Y Phase Measurements	2-19
SECTION 3	CIRCUIT DESCRIPTION	
	Introduction	3-1
	Block Diagram Description	3-1
	Detailed Circuit Description	3-1
	Trigger Input	3-1
	Trigger Amplifier	3-2
	Input Stage	3-3
	Peak Detector	3-3
	Slope Comparator	3-4
	Output Stage	3-4
	Trigger Generator	3-4
	Trigger Pulse Generator	3-4
	Sweep Gate Stage	3-4
	Triggered Hold-Off Stage	3-5
	Bright Line Auto	3-5
	External Horizontal Amplifier	3-5
	Time-Base Generator	3-6
	General	3-6
	Normal Trigger Mode Operation	3-7
	Single Sweep Operation	3-8
	Alternate Operation	3-8
	Delayed Sweep Operation	3-9
	Horizontal Preamp	3-9
	Readout Block	3-9
SECTION 4	MAINTENANCE	
	Preventive Maintenance	4-1
	General	4-1
	Cleaning	4-1
	Visual Inspection	4-1
	Transistor Checks	4-1
	Recalibration	4-1

TABLE OF CONTENTS (cont)

		Page
SECTION 4	MAINTENANCE (cont)	
	Troubleshooting	4-2
	Troubleshooting Aids	4-2
	Troubleshooting Equipment	4-3
	Troubleshooting Techniques	4-3
	Corrective Maintenance	4-5
	Obtaining Replacement Parts	4-5
	Soldering Techniques	4-6
	Component Replacement	4-6
	Instrument Repackaging	4-8
SECTION 5	PERFORMANCE CHECK/CALIBRATION	
	Introduction	5-1
	Test Equipment Required	5-1
	Short Form Procedure	5-2
	Performance Check/Calibration Procedure	5-4
	General	5-4
	Preliminary Control Settings	5-4
	Check/Adjust Steps (refer to Short-Form Procedure for index to steps)	5-5
SECTION 6	ELECTRICAL PARTS LIST	
	Abbreviations and Symbols	
	Parts Ordering Information	
	Index of Electrical Parts List	
SECTION 7	DIAGRAMS	
SECTION 8	MECHANICAL PARTS LIST	

CHANGE INFORMATION

Abbreviations and symbols used in this manual are based on or taken directly from IEEE Standard 260 "Standard Symbols for Units", MIL STD-12B and other standards of the electronics industry. Change information, if any, is located at the rear of this manual.

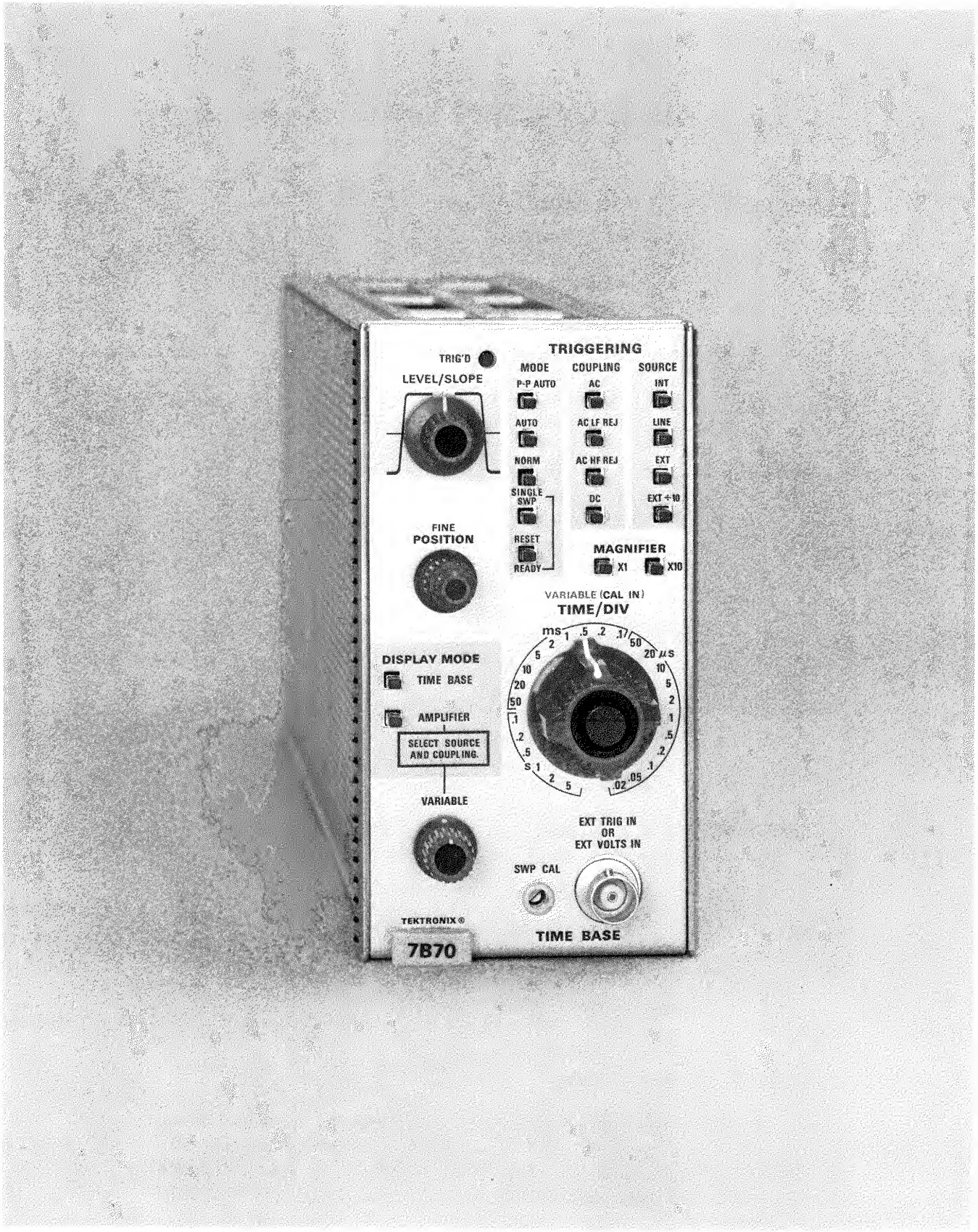

Fig. 1-1. 7B70 Time Base.

SECTION 1
7B70 SPECIFICATION

Change information, if any, affecting this section will be found at the rear of the manual.

Introduction

The 7B70 Time Base Unit is designed specifically for use with Tektronix 7700-series oscilloscopes. However, it is compatible with all 7000-series oscilloscopes. The 7B70 provides calibrated sweeps from 5 seconds/division to 0.02 microsecond/division. The X10 MAGNIFIER extends the calibrated sweep to 2 nanoseconds/division. Sweep rates may be varied continuously (uncalibrated) between calibrated steps. Sweep triggering is to 200 megahertz or vertical amplifier bandwidth, whichever is less. The 7B70 features an external horizontal amplifier to display signals applied to the EXT VOLTS IN connector. The sweep free-runs to provide a bright base line in the absence of adequate triggering signal in P-P AUTO and AUTO triggering modes.

The Performance Check Procedure given in Section 5 provides a convenient method of checking performance of this instrument. The following electrical characteristics apply at an ambient temperature of 0°C to +50°C, unless otherwise noted. Warmup time for given accuracy is 20 minutes.

TABLE 1-1

ELECTRICAL CHARACTERISTICS

Characteristic	Performance			
Sweep Rate				
Calibrated Range	5 seconds/division to 0.02 microsecond/division in a 1-2-5 sequence. X10 magnifier extends sweep rate to 2 nanoseconds/division.			
VARIABLE Range (uncalibrated)	Continuously variable between calibrated sweep rates. Extends uncalibrated sweep rate to at least 12.5 seconds/division.			
Sweep Accuracy	Measured in 7000 series mainframe.			
Time Interval	+15°C to +35°C		0°C to +50°C	
Over Center 8 div	Unmag	Mag	Unmag	Mag
5 s/div to 0.1 s/div and 0.2 μs/div to 0.02 μs/div	3%	3.5%	4%	5%
50 ms/div to 0.5 μs/div	2%	2.5%	3%	4%
Over any 2 div interval within center 8 div	5%		7%	

Characteristic	Performance
Excluded Divisions of Magnified Sweep	Start of Sweep; 12 ns in 7900 series, 20 ns in 7704A, 50 ns in other 7000 series mainframes. End of Sweep; beyond the 90th division
Sweep Length	10.0 divisions to 13 divisions.
Sweep Hold-Off Time	
5 s/div to 5 μs/div	1.5 times the TIME/DIVISION setting or less.
2 μs/div to 0.02 μs/div	3.5 microseconds or less.
External Horizontal Amplifier	
Deflection Factor	
EXT VARIABLE Fully Clockwise	25 millivolts/division within 5 millivolts/division.
EXT ÷ 10 VARIABLE Fully Clockwise	250 millivolts/division within 50 millivolts/division.
VARIABLE Range	At least 10:1

TABLE 1-1 (cont)

Characteristic	Performance		
Nominal Frequency Response	System −3 dB points in 7700-series oscilloscope.		
	Lower −3 dB	Upper −3 dB	
AC, AC LF REJ, AC HF REJ	16 hertz	100 kilohertz	
DC	- - - - -	100 kilohertz	
Trigger Sensitivity	Triggering Frequency Range[1]	Minimum Triggering Signal Required	
Coupling		INT	EXT
AC	30 Hz to 20 MHz	0.3 div	75 mV
	20 MHz to 200 MHz	1.5 div	375 mV
AC LF REJ[2]	30 kHz to 20 MHz	0.3 div	75 mV
	20 MHz to 200 MHz	1.5 div	275 mV
AC HF REJ	30 Hz to 50 kHz	0.3 div	75 mV
DC	DC to 20 MHz	0.3 div	75 mV
	20 MHz to 200 MHz	1.5 div	375 mV
	[1] On Internal Triggering Only; the specified upper −3 dB frequency of the Vertical System replaces upper limit frequencies in the above table when the number in the table is greater than the −3 dB frequency of the Vertical System. [2] Will not trigger on sine waves of 3 divisions or less internal or 1.5 volts external below 120 Hz.		
Single Sweep	Triggering requirements same as normal sweep. When triggered, sweep generator produces one sweep only.		
Internal Trigger Jitter	1 nanosecond or less at 150 megahertz.		

TABLE 1-1 (cont)

Characteristic	Performance
External Trigger Input	
Maximum Input Voltage	500 volts (DC + Peak AC). 500 volts (P-P AC) at 1 kilohertz or less.
Input R and C	1 megohm within 2%, 20 picofarads within 2 picofarads.
Level Range (Excluding P-P AUTO)	
EXT	At least +1.5 volts to −1.5 volts.
EXT ÷ 10	At least +15 volts to −15 volts.
P-P AUTO Operation	
Sensitivity	0.5 div Internal, 125 millivolts External, 200 Hz to 20 MHz. Upper frequency and amplitude limits same as NORMAL Trigger Sensitivity.
Low Frequency Response	Must Trigger on 50 hertz, 2 division signal.

TABLE 1-2

ENVIRONMENTAL CHARACTERISTICS

This instrument will meet the electrical characteristics given in Table 1-1 over the following environmental limits.

Characteristic	Performance
Altitude	
Non-operating	To 50,000 feet and −55°C.

TABLE 1-3

PHYSICAL CHARACTERISTICS

Characteristic	Performance
Finish	Front panel is anodized aluminum.
Dimensions	14.583 inches long by 2.75 inches wide by 5 inches high.
Weight	Approximately 2.88 pounds.

SECTION 2
OPERATING INSTRUCTIONS

Change information, if any, affecting this section will be found at the rear of the manual.

General

The 7B70 plug-in unit operates with a Tektronix 7000-series indicator oscilloscope and a 7A-series vertical plug-in unit to form a complete oscilloscope system. To effectively use the 7B70 its operation and capabilities should be known. This section describes the operation of the front-panel controls, gives first-time and general operating information and lists some basic applications for this instrument.

Installation

The 7B70 is designed to operate in the horizontal plug-in compartments of Tektronix 7000-series oscilloscopes. The 7B70 can also be installed in a vertical plug-in compartment to provide a sweep that runs vertically on the CRT. However, when used in this manner, there is no retrace blanking or internal triggering provision and the unit may not meet the specifications given in Section 1. The instructions in this manual are written for use of the 7B70 in a horizontal plug-in compartment of the oscilloscope.

When the 7B70 is used with an oscilloscope which has two horizontal plug-in compartments, install this unit in the B (right) compartment. Then, if a delaying-sweep unit is installed in the A (DELAYING TIME BASE) compartment, delayed-sweep operation is available. The 7B70 will operate properly in the A compartment for all horizontal modes of operation except delaying sweep.

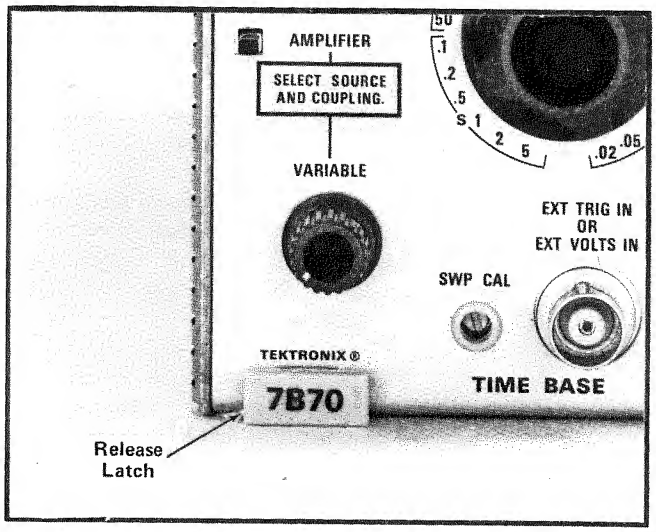

Fig. 2-1. Location of release latch.

To install the 7B70 into a plug-in compartment, push it in until it fits firmly into the indicator plug-in compartment. To remove, pull the release latch (see Fig. 2-1) to disengage the unit from the indicator and pull it out of the plug-in compartment. Even though the horizontal gain of the indicator oscilloscope is standardized to minimize adjustment when inserting plug-in units, the sweep calibration of the 7B70 should be checked when it is inserted into the indicator to verify measurement accuracy. The procedure for checking the unit is given under Sweep Calibration Check in this section.

FRONT-PANEL CONTROLS

General

All controls required for the operation of the 7B70 are located on the front panel of the unit (see Fig. 2-2). To make full use of the capabilities of this instrument, the operator should be familiar with the function and use of each of these controls. A brief description of the front-panel controls and connector is given here. More detailed information is given under General Operating Information.

Triggering Controls

LEVEL/SLOPE — Selects the amplitude point and slope of trigger signal on which the sweep is triggered. When the indicator line on the outer ring is to the left of center, the sweep is triggered on the positive-going slope of the trigger signal, as shown by the positive-going waveform. To the right of center, the sweep is triggered on the negative-going slope of the trigger signal as shown by the negative-going waveform.

TRIG'D — Light indicates that the sweep is triggered and will produce a display with correct setting of the POSITION control and the controls on the associated vertical unit and indicator oscilloscope.

MODE

Series of push-button switches to select the trigger mode. Selected mode is indicated by lighted button.

P-P AUTO: Sweep automatically triggered at point selected by the LEVEL/SLOPE control when the trigger signal repetition rate is above about 200 hertz and within the frequency range selected by the COUPLING switch. Triggered sweep can be obtained throughout the entire range of the LEVEL/SLOPE control. When the trigger repetition rate is below the lower frequency limit (or above upper limit for AC HF REJ) or when the trigger signal is inadequate, the sweep free runs at the sweep rate selected by the TIME/DIV switch to produce a reference trace.

AUTO: Sweep initiated by the applied trigger signal at point selected by the LEVEL/SLOPE control when the trigger signal repetition rate is above about 30 hertz and within the frequency range selected by the COUPLING switch. Triggered sweep can be obtained only over the amplitude range of the applied trigger signal. When the LEVEL/SLOPE control is outside the amplitude range, the trigger repetition rate is below the lower frequency limit (or above upper limit for AC HF REJ) or the trigger signal is inadequate, the sweep free runs at the sweep rate selected by the TIME/DIV switch to produce a reference trace.

NORM: Sweep initiated by the applied trigger signal at any point selected by the LEVEL/SLOPE control over the frequency range selected by the COUPLING switch. Triggered sweep can be obtained only over the amplitude range of the applied trigger signal. When the LEVEL/SLOPE control is outside the amplitude range, the trigger repetition rate is outside the frequency range selected by the COUPLING switch or the trigger signal is inadequate, there is no trace.

SINGLE SWP: Sweep initiated by the applied trigger signal at any point selected by the LEVEL/SLOPE control over the frequency range selected by the COUPLING switch. Triggered sweep can be obtained only over the amplitude range of applied trigger signal. After the first sweep is displayed, further sweeps cannot be presented until the RESET-READY push-button is pressed. When the LEVEL/SLOPE control is outside the amplitude range, the trigger repetition rate is outside the frequency range selected by the COUPLING switch, the trigger signal is inadequate or when the RESET-READY light is off, there is no trace.

RESET-READY: Push-button to reset the Sweep Generator for the next sweep in the single-sweep mode. The RESET-READY button remains lighted to indicate that the unit is ready to be triggered. After the unit is triggered and a sweep is completed, the RESET-READY light goes out until the button is pressed again.

COUPLING

Series of push-button switches to select the trigger coupling. Selected coupling is indicated by lighted button.

AC: Rejects DC and attenuates AC signals below about 30 hertz. Accepts signals between 30 hertz and 200 megahertz.

AC LF REJ: Rejects DC and attenuates signals below about 30 kilohertz. Accepts signals between 30 kilohertz and 200 megahertz.

AC HF REJ: Accepts signals between about 30 hertz and 50 kilohertz. Rejects DC and attenuates signals outside this frequency range.

DC: Accepts all trigger signals from DC to 200 megahertz.

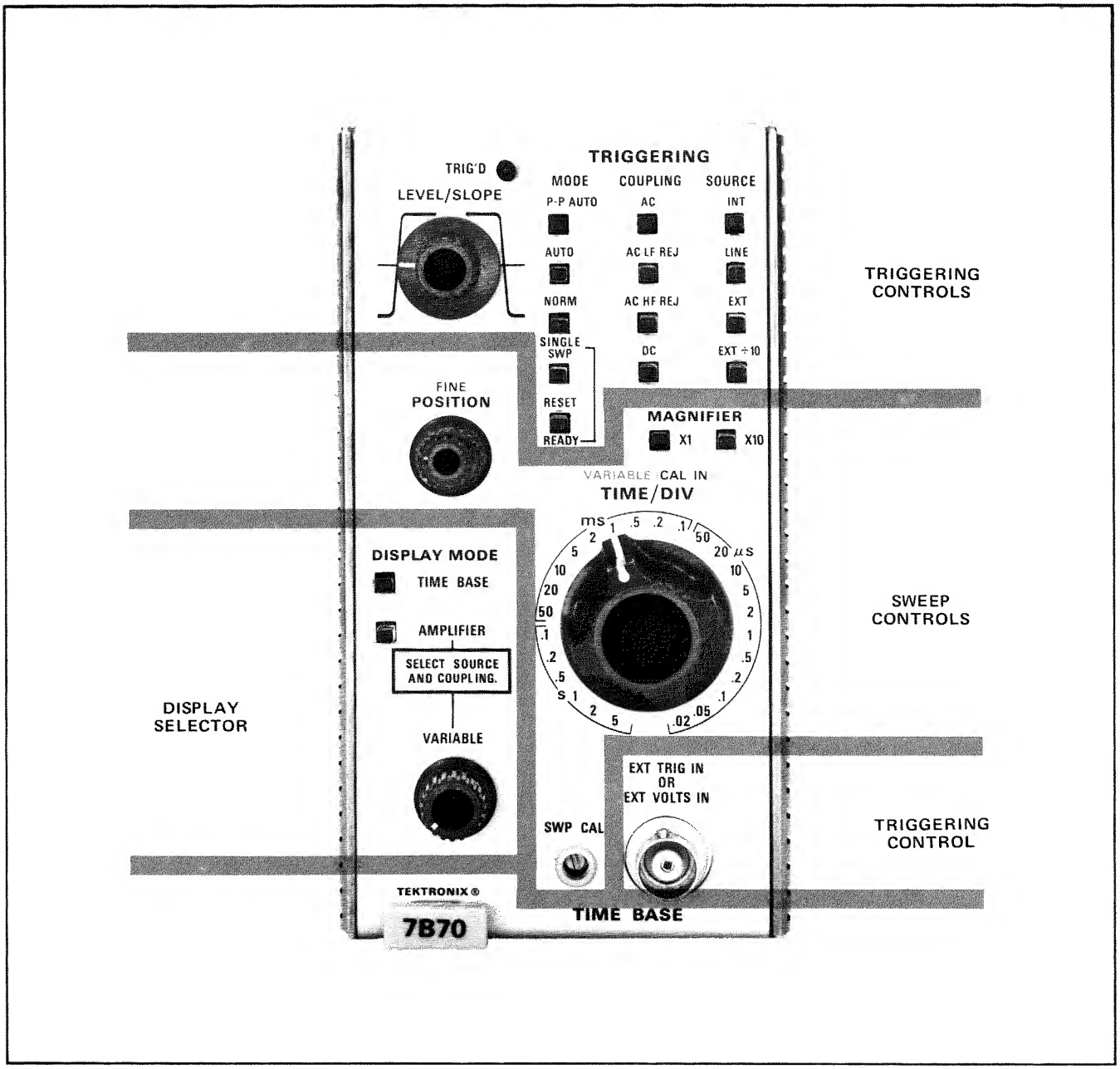

Fig. 2-2. Front-Panel controls and connectors.

SOURCE

Series of push-button switches to select the trigger source. Selected source is indicated by lighted button.

INT: Trigger signal obtained internally from a vertical unit.

LINE: Trigger signal obtained internally from a sample of the line voltage applied to this instrument.

EXT: Trigger signal obtained from an external signal applied to the EXT TRIG IN connector.

EXT ÷ 10: Trigger signal obtained from an external signal applied to the EXT TRIG IN connector as in the EXT position. In this position the external signal is attenuated 10 times before it is applied to the trigger circuit.

EXT TRIG IN or EXT VOLTS IN

Input connector for external trigger signal or amplifier input signal.

Sweep Controls

POSITION	Controls horizontal position of display.
FINE	Provides more precise control of horizontal positions.
TIME/DIV	Selects the basic sweep rate of the output sawtooth. The VARIABLE control must be in calibrated position and MAGNIFIED switch set to X1 for indicated sweep rate.
VARIABLE (TIME/DIV)	Two-position switch actuated by the VARIABLE knob to select calibrated or uncalibrated sweep rates. At the in position, the VARIABLE control is inoperative and the sweep rate is calibrated. When pressed and released, the knob moves out to activate the VARIABLE control for uncalibrated sweep rates. The sweep rate in each TIME/DIV switch position can be reduced to at least the sweep rate of the next adjacent position, to provide continuously variable sweep rates from 2 nanoseconds/division (X10-MAGNIFIER on) to about 12.5 seconds/division, with MAGNIFIER at X1.
MAGNIFIED	Push-button switches to select the horizontal magnification. The Selected magnification is indicated by a lighted button. X1:Magnified sweep at the basic sweep rate indicated by TIME/DIV switch. X10: Magnified sweep at a sweep rate 10 times faster than the basic sweep rate indicated by the TIME/DIV switch. The portion of the normal sweep within the center division of the graticule is the portion shown in magnified form.
SWP CAL	Screwdriver adjustment to set amplitude of the output sawtooth.

Display Mode

TIME BASE	Selects sweep rates as determined by TIME/DIV switch.
AMPLIFIER	Displays signals applied to the EXT TRIG IN or EXT VOLTS IN connector. Select TRIGGERING SOURCE and COUPLING.
VARIABLE (amplifier)	Varies deflection factor by a factor of 10.

TEST SETUP CHART

General

Fig. 2-3 shows the front panel of the 7B70. This chart can be reproduced and used as a test-setup record for special measurements, applications or procedures, or it may be used as a training aid for familiarization with this instrument.

GENERAL OPERATING INFORMATION

Sweep Calibration Check

Whenever the 7B70 is inserted into a plug-in compartment other than the one in which it was calibrated, the sweep calibration should be checked and readjusted if necessary. Allow five minutes warmup before performing this procedure.

NOTE

For accurate sweep timing, apply a signal of known frequency or time period (time-mark signal, calibrator square wave, 60 hertz line etc.) to the associated vertical amplifier unit and adjust the TIME/DIV OR DLY TIME switch and the SWP CAL control to calibrate the signal to the oscilloscope graticule. Be sure that the sweep timing signal is accurate within 0.5%. The following sweep calibration procedure uses a Tektronix Time-Mark Generator.

1. Connect a 1 millisecond time-mark signal from the Time-Mark Generator with a 50-ohm BNC coaxial cable and 50-ohm BNC termination to the Input of the associated vertical unit.

2. Set the TIME/DIV switch to 1 ms and press the top TRIGGERING and DISPLAY MODE pushbuttons.

3. Set the Vertical unit to display at least two divisions of the signal vertically.

4. Check the CRT display for one complete cycle per division.

5. If necessary, adjust the SWP CAL adjustment for one complete cycle per division.

Simplified Operating Instructions

The following information is provided to aid in quickly obtaining the correct settings for the 7B70 to present a

7B70 TEST SET-UP CHART

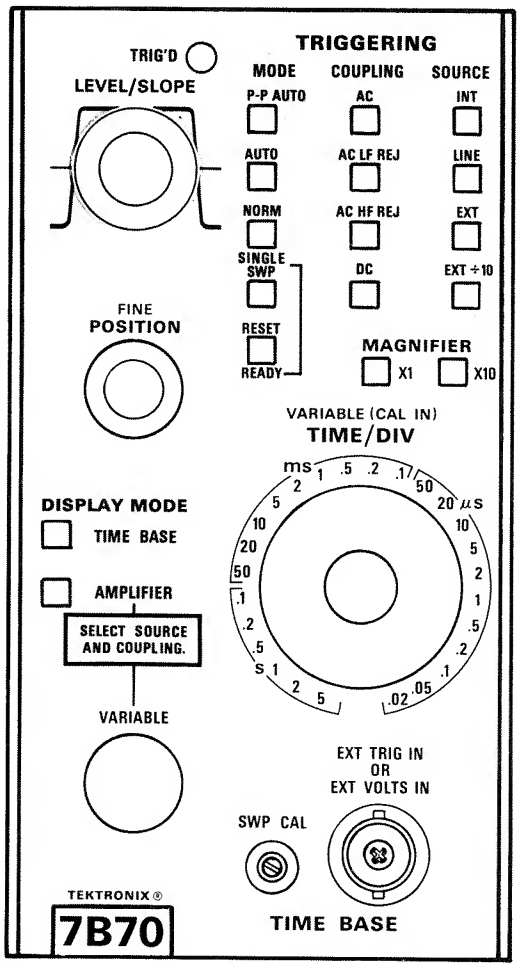

NOTES:

Fig. 2-3. 7B70 Test Setup Chart.

display. The operator should be familiar with the complete function and operation of the unit as described in this section before using this procedure.

Normal Sweep. The following procedure will provide a stable display for most normal-sweep applications.

1. Select the TRIGGERING MODE, COUPLING and SOURCE which fit the requirements of the signal to be displayed.

2. Turn the LEVEL/SLOPE control to the desired slope.

3. If the green TRIG'D light is not on, adjust the LEVEL/SLOPE control throughout the range of the selected slope until the TRIG'D light comes on. If the light does not come on at any setting of the LEVEL/SLOPE control, the trigger signal is inadequate or the COUPLING and SOURCE switches are set incorrectly.

4. Set the TIME/DIV switch and POSITION control for a display which remains on the display area horizontally (VARIABLE control should be in CAL position for calibrated sweep rates).

5. If the display does not start at the correct point on the waveform, readjust the LEVEL/SLOPE control for the desired triggering.

Magnified Sweep. A magnified-sweep display can be obtained as follows after a normal-sweep display is obtained as given in steps 1-5 above.

1. Adjust the POSITION control to move the area to be magnified within the center division of the CRT.

2. If necessary, change the TIME/DIV switch setting so the complete area to be magnified is within the center division.

3. Press the X10-MAGNIFIER push-button.

4. Use the fine range of the POSITION control to establish precise positioning of the magnified display.

Delayed Sweep. The following procedure can be used to obtain a delayed-sweep display when the 7B70 is used in an oscilloscope that has dual time base capabilities and when used with a companion delaying-sweep unit (A). Obtain a display as given in steps 1-5 under Normal Sweep. Then proceed as follows:

1. Press the B STARTS AFTER DELAY push-button on the A time-base.

2. Set the indicator oscilloscope horizontal mode to display the A time base.

3. Set the TIME/DIV switch of the 7B70 so the intensified zone on the display is the desired length (intensified zone will be displayed in delayed form). If the intensified zone is not visible, adjust the indicator intensity controls.

4. Adjust the A time-base DELAY TIME MULT dial to position the intensified zone to the portion of the display to be delayed.

5. Set the indicator oscilloscope horizontal mode to display the B time base (7B70).

6. If a delayed sweep with less jitter is desired, press the A time-base B TRIGGERABLE AFTER DELAY push-button. The triggering controls of the 7B70 must be set to obtain a stable display.

Pushbutton Switch Logic

The TRIGGERING MODE, COUPLING and SOURCE switches and the DISPLAY MODE switch are arranged in a sequence which places the most often-used position at the top of each series of pushbuttons. With this arrangement, a stable normal-sweep display can usually be obtained by pressing the top push-buttons; P-P AUTO, AC, INT and TIME BASE. When an adequate trigger signal is applied, the unit is triggered as indicated by the illuminated TRIG'D light at any setting of the LEVEL/SLOPE control. If the TRIG'D light is not on, either the trigger signal applied to this unit from the vertical unit is inadequate or it is below the lower frequency limit of the AC COUPLING switch position. If the desired display is not obtained with the pushbuttons pushed in, other selections must be made. Refer to the following discussions or the instruction manuals for the associated indicator oscilloscope and vertical unit for more information.

Triggered Light

The TRIG'D light provides a convenient indication of the condition of the triggering circuits. If the TRIGGERING controls are correctly set and an adequate trigger

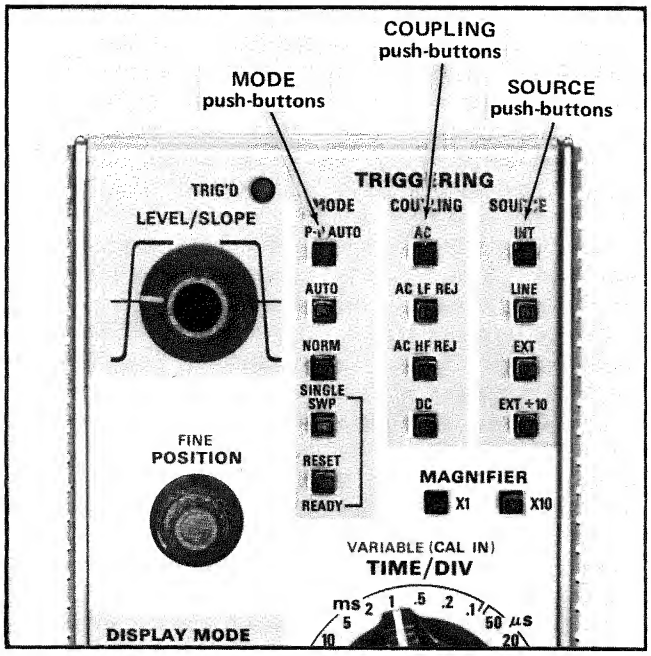

Fig. 2-4. Exploded view of front panel showing push-buttons associated with the MODE, COUPLING and SOURCE switches.

signal is applied, the TRIG'D light is on. Under certain conditions, the TRIG'D light may be off, indicating that the sweep is not triggered. The cause might be a misadjusted LEVEL/SLOPE control, incorrectly set COUPLING or SOURCE switches, low trigger signal amplitude, or a trigger signal repetition rate outside the acceptable frequency range. This feature can be used as a general indication of correct triggering. It is particularly useful when setting up the trigger circuits when a trigger signal is available without a display on the CRT. It also indicates that this unit is correctly triggered when operating as a delayed-sweep unit (B).

Trigger Mode

The pushbuttons located under the MODE title (see Fig. 2-4) select the mode in which the sweep is triggered. The selected mode is indicated by a lighted pushbutton.

P-P AUTO. When the P-P AUTO pushbutton is pressed, a triggered display is provided at any setting of the LEVEL/SLOPE control whenever an adequate trigger signal is applied. The range of the LEVEL/SLOPE control in this mode is between about 10% and 90% of the peak-to-peak amplitude of the applied trigger signal. The LEVEL/SLOPE control can be set so the displayed waveform starts at any point within this range on either slope. In the P-P AUTO mode, the trigger circuit automatically compensates for changes in trigger signal amplitude for signals above the minimum amplitude requirement. Therefore, if the LEVEL/SLOPE control is set so the displayed waveform starts at a certain percentage-point on the leading edge of a low-amplitude signal, it triggers at the same percentage-point on the leading edge of a high-amplitude signal if the LEVEL/SLOPE control is not changed. This operation is illustrated in Fig. 2-5.

When the trigger repetition rate is below about 200 hertz (or outside the frequency range selected by the COUPLING switch), or when the trigger signal is inadequate, the sweep free runs at the sweep rate indicated by the TIME/DIV switch to produce a reference trace (TRIG'D light off). When an adequate trigger signal is again applied, the free-running condition ends and a triggered display is presented.

The P-P AUTO trigger mode is particularly useful when observing a series of waveforms, since it is not necessary to reset the LEVEL/SLOPE control for each observation. Also, because of the ease of obtaining a triggered display in

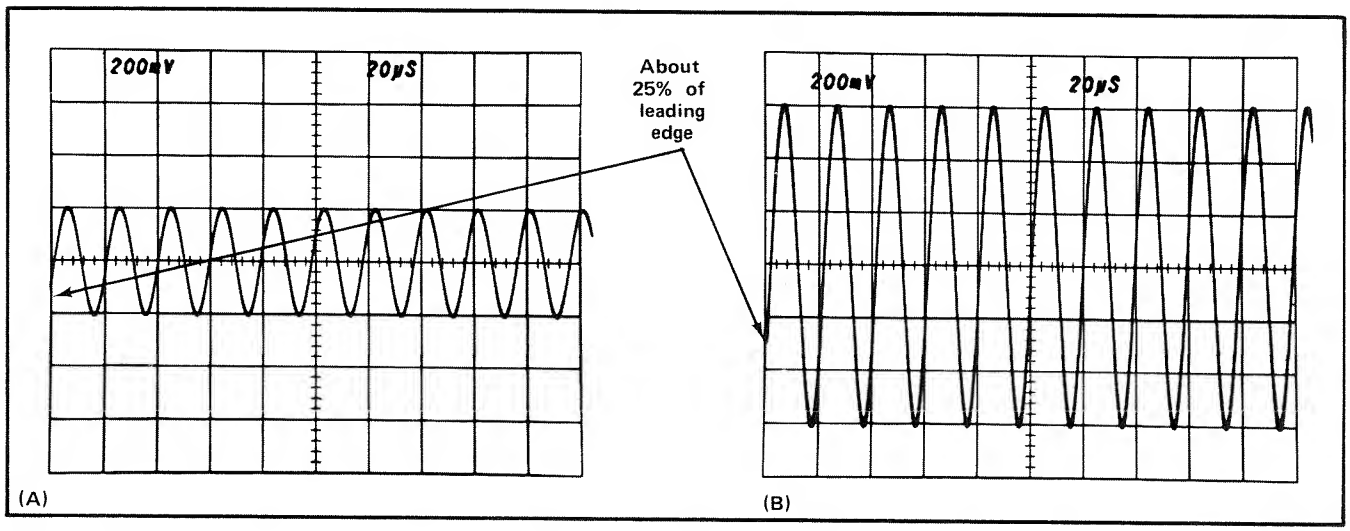

Fig. 2-5. LEVEL/SLOPE control operation for (P-P) AUTO mode triggering. (A) LEVEL/SLOPE control set so displayed waveform starts at about 25% point of a one-division waveform. (B) displayed waveform still triggered at about 25% of leading edge, when signal amplitude increases to produce an eight-division display (LEVEL/SLOPE control at same setting for both waveforms).

this mode, the P-P AUTO trigger mode can be used for most applications and the remaining modes used only for special applications or when stable triggering is not obtainable in this mode.

AUTO. When the AUTO push-button is illuminated, a triggered display is presented with the correct setting of the LEVEL/SLOPE control (see Trigger Level discussion) whenever an adequate trigger signal is applied. The range of the LEVEL/SLOPE control in this mode is ±8 vertical divisions. The TRIG'D light indicates when the display is triggered.

When the trigger repetition rate is below about 30 hertz (or outside the frequency range selected by the COUPLING switch) or when the trigger signal is inadequate, the sweep free runs at the sweep rate indicated by the TIME/DIV switch to produce a reference trace (TRIG'D light off). When an adequate trigger signal is again applied, the free-running condition ends and a triggered display is presented. When the LEVEL/SLOPE control is at a setting outside the amplitude range of the trigger signal, the sweep also free runs at the sweep rate indicated by the TIME/DIV switch. This type of free-running display can be useful when it is desired to measure only the maximum peak-to-peak amplitude of a signal without observing the waveshape (such as in bandwidth measurements).

NORM. When the NORM push-button is pressed, a triggered display is presented with the correct setting of the LEVEL/SLOPE control whenever an adequate trigger signal is applied. The range of the LEVEL/SLOPE control in this mode is ±8 vertical divisions. The TRIG'D light indicates when the display is triggered.

The NORM trigger mode must be used to produce triggered displays with trigger repetition rates below about 30 hertz. When the LEVEL/SLOPE control is at a setting outside the amplitude range of the trigger signal, when the trigger repetition rate is outside the frequency range selected by the COUPLING switch or when the trigger signal is inadequate, there is no trace (TRIG'D light off).

SINGLE SWP. When the signal to be displayed is not repetitive or varies in amplitude, waveshape or repetition rate, a conventional repetitive type display may produce an unstable presentation. A stable display can often be obtained under these circumstances by using the single-sweep feature of this unit. The SINGLE SWP MODE is also useful to photograph non-repetitive or unstable displays.

To obtain a single-sweep display of a repetitive signal, first obtain the best possible display in the NORM MODE. Then without changing the other TRIGGERING controls, press the SINGLE SWP pushbutton. When ready to view the single-sweep display, press the RESET-READY pushbutton. A single trace is presented each time the RESET-READY pushbutton is pressed (as long as the repetitive signal remains connected to the system and TRIGGERING controls are correctly set) and further sweeps cannot be presented until the RESET-READY pushbutton is pressed again. If the displayed signal is a complex waveform composed of pulses of varying amplitude, successive single-sweep displays may not start at the same point of the waveform. To avoid confusion due to the CRT persistence, allow the display to decay before pressing the RESET-READY pushbutton again. At fast sweep rates, it may be difficult to view the single-sweep display. The apparent trace intensity can be increased by reducing the ambient light level or using a viewing hood as recommended in the indicator instruction manual.

Non-repetitive, random signals can be displayed in the single-sweep mode by first obtaining the best possible display in the NORM MODE with a signal which is about the same amplitude and frequency as the random signal. Then without changing the other TRIGGERING controls, press the SINGLE SWP pushbutton. When ready for the random signal, press the RESET-READY pushbutton. The RESET-READY pushbutton remains lighted to indicate that the unit has been reset and is ready to produce a sweep. The light goes out after the random signal triggers the unit. To prepare the unit for another single-sweep display, press the RESET-READY pushbutton again.

When using the single-sweep mode to photograph waveforms, the graticule must be photographed separately in the normal manner to prevent over-exposing the film. Be sure the camera system is well protected against stray light, or operate the system in a darkened room. For repetitive waveforms, press the RESET-READY pushbutton only once for each waveform unless the signal is completely symmetrical. Otherwise, multiple waveforms may appear on the film. For random signals, the camera lens can be left open until the random signal triggers the unit (RESET-READY pushbutton lighted). Further information on photographic techniques is given in the camera instruction manual.

Trigger Coupling

The pushbuttons located below the COUPLING title (see Fig. 2-4) select the method in which the trigger signal is connected to the trigger circuits. The selected coupling is indicated by a lighted pushbutton. Each position permits selection or rejection of the frequency components of the trigger signal which trigger the sweep. Fig. 2-6 graphically illustrates the band of frequencies covered by each position of the COUPLING switch.

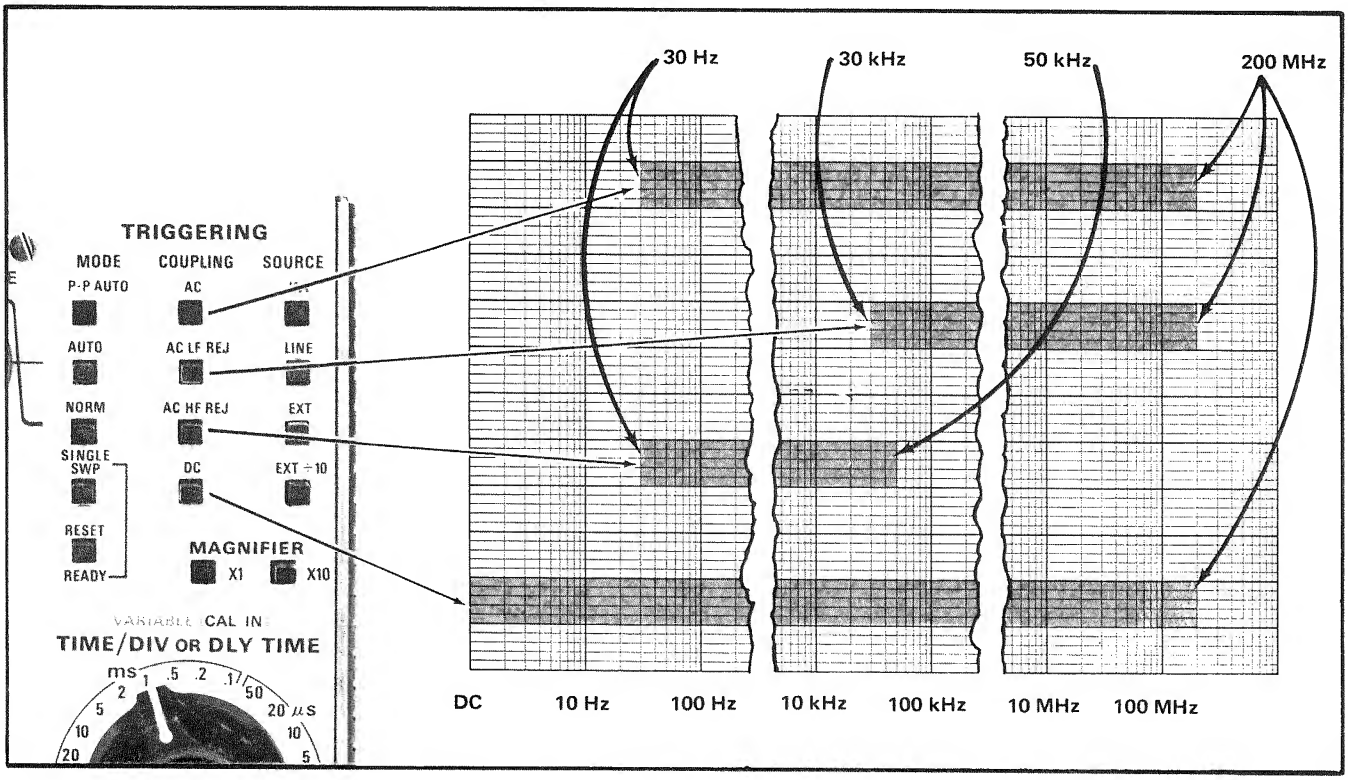

Fig. 2-6. Frequency range of each COUPLING switch position.

AC. In the AC position of the COUPLING switch, the DC component of the trigger signal is blocked. Signals with low-frequency components below about 30 hertz are attenuated. In general, AC COUPLING can be used for most applications. However, if the signal contains unwanted frequency components or if the sweep is to be triggered at a low repetition rate or DC level, one of the remaining COUPLING switch positions will provide a better display.

The triggering point in the AC position depends upon the average voltage level of the trigger signal. If the trigger signal occurs randomly, the average voltage level will vary, causing the triggering point to vary also. This shift of the triggering point may be enough so it is impossible to maintain a stable display. In such cases, use DC coupling.

AC LF REJ. In the AC LF REJ position, DC is rejected and low-frequency trigger signals below about 30 kilohertz are attenuated. Therefore, the sweep is triggered only by the higher-frequency components of the trigger signal. This position is particularly useful for providing stable triggering if the trigger signal contains line-frequency components. Also, the AC LF REJ position provides the best alternate-mode vertical displays at fast sweep rates when comparing two or more unrelated signals (with dual-trace vertical or slaved triggering operation for dual-vertical unit operation).

AC HF REJ. The AC HF REJ position passes all low-frequency signals between about 30 hertz and 50 kilohertz. DC is rejected and signals outside the above range are attenuated. When triggering from complex waveforms, this position is useful for providing stable display of the low-frequency components.

DC. DC COUPLING can be used to provide stable triggering with low-frequency signals which would be attenuated in the other modes, or with low-repetition rate signals. It can also be used to trigger the sweep when the trigger signal reaches a DC level selected by the setting of the LEVEL/SLOPE control. When using internal triggering, the setting of the vertical unit position controls affects the DC triggering point.

Trigger Source

The pushbuttons located below the SOURCE title (see Fig. 2-4) select the source of the trigger signal which is connected to the trigger circuits. The selected source is indicated by a lighted pushbutton.

INT. In the INT position of the SOURCE switch, the trigger signal is derived from the associated vertical unit. Further selection of the internal trigger signal may be pro-

vided by the associated vertical unit or indicator oscilloscope; see the instruction manuals for these instruments for information. For most applications, the INT-SOURCE position can be used. However, some applications require special triggering which cannot be obtained in the INT-SOURCE position. In such cases LINE- or EXT-SOURCE must be used.

LINE. The LINE position of the SOURCE switch connects a sample of the power-line voltage, to which the indicator oscilloscope is connected, to the trigger circuit. Line triggering is useful when the input signal is time-related (multiple or sub-multiple) to the line frequency. It is also useful for providing a stable display of a line-frequency component in a complex waveform.

EXT. An external signal connected to the EXT TRIG IN connector can be used to trigger the sweep in the EXT-SOURCE position. The external signal must be time-related to the displayed waveform for a stable display. An external trigger signal can be used to provide a triggered display when the internal signal is too low in amplitude for correct triggering or contains signal components on which it is not desired to trigger. It is also useful when signal tracing in amplifiers, phase-shift networks, wave-shaping circuits, etc. The signal from a single point in the circuit under test can be connected to the EXT TRIG IN connector through a probe or cable. The sweep is then triggered by the same signal at all times and allows amplitude, time relationship or waveshape changes of signals at various points in the circuit to be examined without resetting the TRIGGERING controls.

EXT ÷ 10. Operation in the EXT ÷ 10 position is the same as described for EXT except that the external signal is attenuated 10 times. Attenuation of high-amplitude external trigger signals is desirable to broaden the range of the LEVEL/SLOPE control.

Trigger Slope

The LEVEL/SLOPE control determines whether the trigger circuit responds on the positive-going or negative-going portion of the trigger signal. When the indicator line on the outer ring of the LEVEL/SLOPE control is to the left of center, the display starts on the positive-going portion of the waveform (notice positive-going waveform to left of control. To the right of center, the display starts on the negative-going portion of the waveform (notice negative-going waveform). The effect of the LEVEL/SLOPE control on the displayed waveform is shown in Fig. 2-7. When several cycles of a signal appear in the display, the selection of the trigger slope is often unimportant. However, if only a certain portion of a cycle is to be displayed, correct setting of the LEVEL/SLOPE control is important to provide a display which starts on the desired slope of the input signal.

Trigger Level

The LEVEL/SLOPE control determines the voltage level on the trigger signal at which the display is triggered, as well as selecting the trigger slope. The center knob of the LEVEL/SLOPE control provides about a 3:1 reduction in relation to the outer indicator ring, to allow precise level selection. This control can also be turned throughout the complete 360° rotation to allow continuous triggering over the selected slope. This is particularly useful in the P-P AUTO MODE. When the LEVEL/SLOPE control is set to the "O" on either the positive-going or negative-going waveform, the sweep is triggered near the zero-volt level of the trigger signal. As the LEVEL/SLOPE control is rotated away from the "O", the displayed waveform starts at a point corresponding to the position of the indicator line on the associated slope waveform (within amplitude range of trigger signal except in P-P AUTO MODE which provides triggered display throughout entire slope). For example if the LEVEL/SLOPE control is turned clockwise from the "O" on the positive-going slope, the displayed waveform starts at a more positive level. Fig. 2-7 illustrates the operation of the LEVEL/SLOPE control at different levels and slopes of a displayed waveform.

Before setting the triggering level, select the TRIGGERING SLOPE, MODE, COUPLING and SOURCE. Then adjust the LEVEL/SLOPE control so the displayed waveform starts at the desired point. The triggering slope can be changed at any time by rotating the LEVEL/SLOPE control to the corresponding point on the other slope waveform.

Horizontal Sweep Rate

The TIME/DIV switch provides 26 calibrated sweep rates ranging from 0.02 microsecond/division to five seconds/division. The VARIABLE TIME/DIV control must be in the calibrated position and the MAGNIFIER at X1 for the indicated sweep rate. The VARIABLE TIME/DIV control incorporates a two-position switch to determine if the sweep rate is calibrated or uncalibrated. When the VARIABLE knob is in the inward position, the VARIABLE TIME/DIV control is inoperative and the sweep rate is calibrated. When pressed and released, the VARIABLE knob moves outward to activate the VARIABLE TIME/DIV control for uncalibrated sweep rates. A calibrated sweep rate can be obtained at any position of the VARIABLE TIME/DIV control by pressing in the VARIABLE knob. This feature is useful when a specific uncalibrated sweep rate has been obtained and it is desired to switch between this uncalibrated sweep rate and a calibrated sweep rate. Switching from uncalibrated to calibrated operation or vice versa does not affect the setting of the VARIABLE TIME/DIV control. The VARIABLE TIME/DIV control allows the sweep rate in each TIME/DIV switch position to be reduced to at least the sweep rate of the next adjacent switch position. This provides an overall uncalibrated vari-

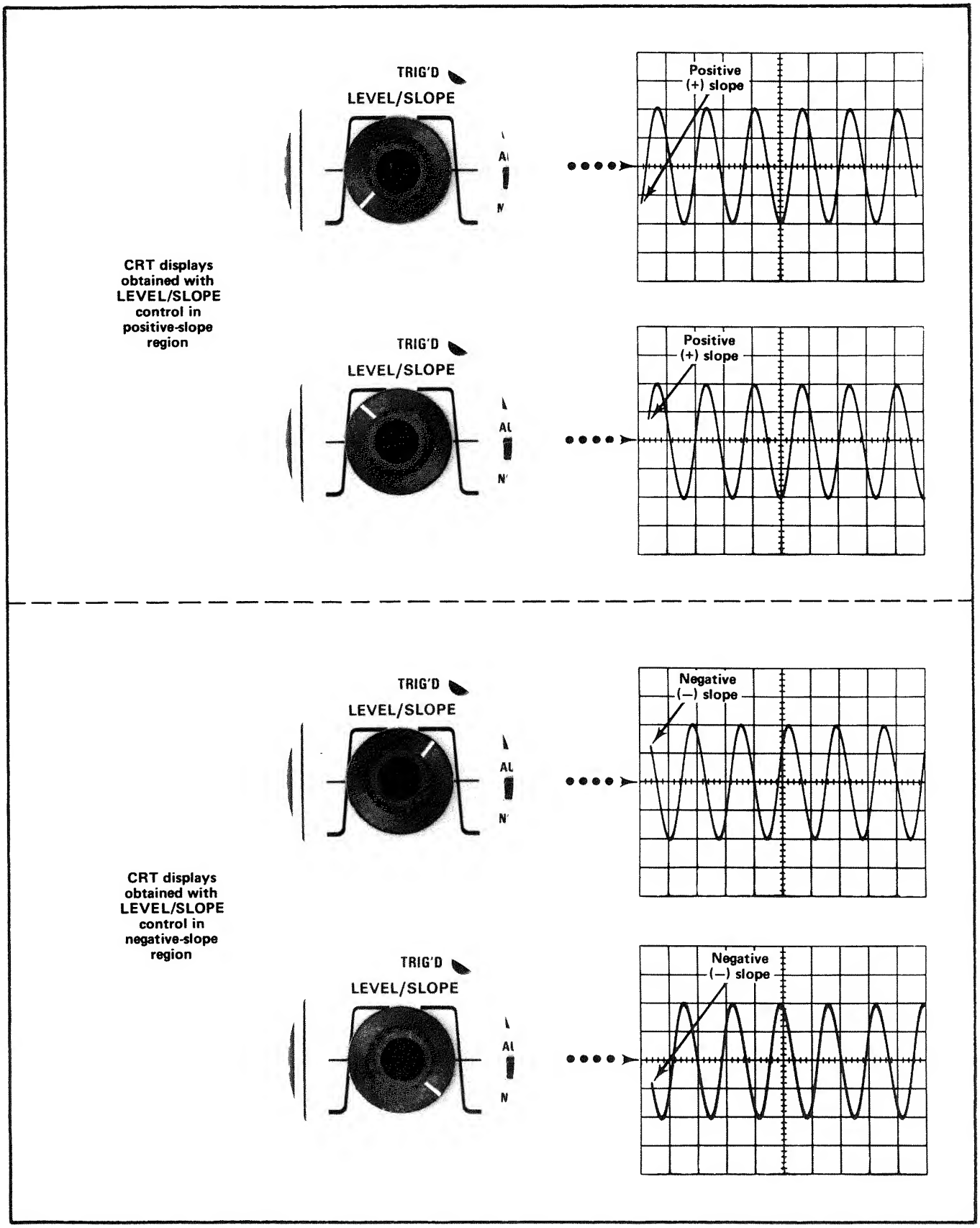

Fig. 2-7. Effect of LEVEL/SLOPE control on CRT display (AUTO P-P MODE).

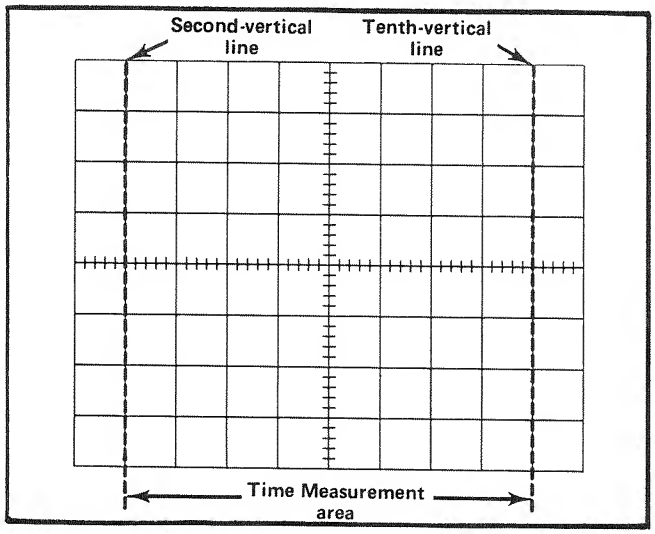

Fig. 2-8. Area of graticule used for accurate time measurements.

able sweep rate range from 20 nanoseconds/division (from 2 nanoseconds/division with MAGNIFIER at X10) to about 12.5 seconds/division.

When making time measurements from the graticule, the area between the second-division and tenth-division vertical lines of the graticule provides the most linear time measurement (see Fig. 2-8). Therefore, the first and last division of the display area should not be used when making accurate time measurements. Position the start of the timing area to the second vertical line (second line from the left) and adjust the TIME/DIV switch so the end of the timing area falls between the second-division and tenth-division vertical lines.

Sweep Magnifier

The sweep magnifier expands the sweep ten times. The center division of the unmagnified display is the portion visible on the screen in magnified form (see Fig. 2-9). Equivalent length of the magnified sweep is more than 100 divisions; any 10-division portion can be viewed by adjusting the horizontal POSITION control to bring the desired portion onto the viewing area. The dual-range feature of the horizontal POSITION control is particularly useful when the MAGNIFIER is set to X10 (see Horizontal Position Control discussion which follows).

To use sweep magnification, first move the portion of the display which is to be expanded to the center of the graticule. Then press the X10-MAGNIFIER pushbutton; the X10 button lights to indicate that the horizontal sweep rate is magnified. Whenever the X10-MAGNIFIER pushbutton is lighted, the equivalent magnified sweep rate can be determined by dividing the TIME/DIV switch setting by

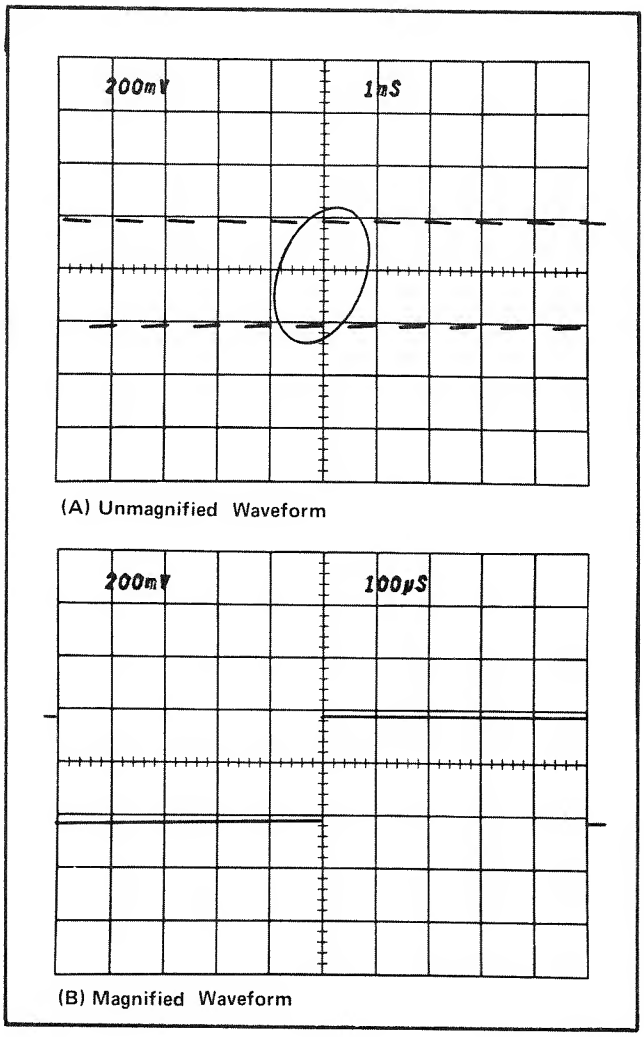

Fig. 2-9. Operation of sweep magnifier.

10. For example, if the TIME/DIV switch is set to .05 μs, the equivalent magnified sweep rate is 5 nanoseconds/division. The equivalent magnified sweep rate must be used for all time measurements when the X10-MAGNIFIER button is lighted. The equivalent magnified sweep rate is calibrated when the VARIABLE TIME/DIV control is in the calibrated position.

Horizontal Position Control

The 7B70 provides both fine and coarse adjustment of positioning. The coarse adjustment provides rapid horizontal positioning of the trace. Fine positioning is provided for more precise control of trace position.

Display Mode

Time-Base. With the DISPLAY MODE switch in the TIME BASE position the 7B70 functions as a normal time-base with the sweep rate set by the TIME/DIV switch.

Amplifier. In some applications, it is desirable to display one signal versus another (X-Y) rather than against time. The AMPLIFIER position of the DISPLAY MODE switch provides a means for applying an external signal to the horizontal amplifier for this type of display. The correct COUPLING and SOURCE must be selected to correspond to the signal applied to the EXT VOLTS IN connector.

Two modes of external horizontal operation are provided. When the SOURCE switch is set to INT, the horizontal deflection is provided by a signal applied to the vertical amplifier. In the EXT and EXT ÷ 10 positions of the SOURCE switch, external horizontal deflection is provided by the signal applied to the EXT VOLTS IN connector. The signal coupling provided by the COUPLING switch can be used to select or reject components of the external horizontal signal.

The external horizontal deflection factor (with Amplifier VARIABLE fully clockwise) is approximately 25 millivolts per division in the EXT position of the SOURCE switch and approximately 250 millivolts per division in the EXT ÷ 10 position of the SOURCE switch.

APPLICATIONS

General

The following information describes the procedures and techniques for making basic measurements with a Tektronix 7700-series Oscilloscope. These applications are not described in detail, since each application must be adapted to the requirements of the individual measurement. This instrument can also be used for many applications not described in this manual. Contact your local Tektronix Field Office or representative for assistance in making specific measurements. Also, the following books describe oscilloscope measurement techniques which can be adapted for use with this instrument:

Harley Carter, "An Introduction to the Cathode Ray Oscilloscope", Philips Technical Library, Cleaver-Hume Press Ltd., London, 1960.

J. Czech, "Oscilloscope Measuring Technique", Philips Technical Library, Springer-Verlag, New York, 1965.

Robert G. Middleton and L. Donald Payne, "Using the Oscilloscope in Industrial Electronics", Howard W. Sams & Co. Inc., The Bobbs-Merrill Company Inc., Indianapolis, 1961.

John F. Rider and Seymour D. Uslan, "Encyclopedia of Cathode-Ray Oscilloscopes and Their Uses", John F. Rider Publisher Inc., New York, 1959.

John F. Rider, "Obtaining and Interpreting Test Scope Traces", John F. Rider Publisher Inc., New York, 1959.

Rufus P. Turner, "Practical Oscilloscope Handbook", Volumes 1 and 2, John F. Rider Publisher Inc., New York, 1964.

Frequency Comparison

Sweep Rates. To establish an arbitrary horizontal sweep rate based upon a specific reference frequency, proceed as follows:

1. Connect the reference signal to the vertical INPUT connector. Set the VOLTS/DIV switch for four or five divisions of vertical deflection.

2. Set the TIME/DIV switch and the VARIABLE TIME/DIV control so one cycle of the signal covers an exact number of horizontal divisions. Do not change the VARIABLE TIME/DIV control after obtaining the desired deflection. This display can be used as a reference for frequency comparison measurements.

3. To establish an arbitrary sweep rate so the repetition rate of an unknown signal can be measured accurately at any setting of the TIME/DIV switch, the repetition rate of the reference signal must be known. If it is not known, it can be measured before the VARIABLE TIME/DIV switch is set in step 2.

4. Divide the repetition rate of the reference signal (seconds) by the product of the horizontal deflection established in step 2 (divisions) and the setting of the TIME/DIV switch. This is the horizontal conversion factor:

$$\text{Horizontal Conversion Factor} = \frac{\text{reference signal repetition rate (seconds)}}{\text{horizontal deflection (divisions)} \times \text{TIME/DIV switch setting}}$$

5. To measure the repetition rate of an unknown signal, disconnect the reference signal and connect the unknown signal to the INPUT connector. Set the TIME/DIV switch to a setting that provides sufficient horizontal deflection to make an accurate measurement. Do not readjust the VARIABLE TIME/DIV control.

6. Measure the horizontal deflection in divisions and calculate the repetition rate of the unknown signal using the following formula:

$$\text{Repetition Rate} = \text{TIME/DIV switch setting} \times \text{horizontal conversion factor} \times \text{horizontal deflection (divisions)}$$

NOTE

If the horizontal magnifier is used, be sure to use the magnified sweep rate in place of the TIME/DIV switch setting.

Example. Assume a reference signal frequency of 455 hertz (repetition rate 2.19 milliseconds), a TIME/DIV switch setting of .2 ms, and the VARIABLE TIME/DIV control adjusted to provide a horizontal deflection of eight divisions. Substituting these values in the horizontal conversion factor formula (step 4):

$$\text{Horizontal Conversion Factor} = \frac{2.19 \text{ milliseconds}}{.2 \times 8} = 1.37$$

Then, with a TIME/DIV switch setting of 50 μs, the repetition rate of an unknown signal which completes one cycle in seven horizontal divisions can be determined by using the repetition rate formula (step 6):

$$\text{Repetition Rate} = 50\ \mu s \times 1.37 \times 7 = 480\ \mu s$$

This answer can be converted to frequency by taking the reciprocal of the repetition rate (see application on Determining Frequency Measurements).

Time-Duration Measurements

To measure time between two points on a waveform, use the following procedure:

1. Connect the signal to either Vertical plug-in.

2. Set the MODE switch to display the plug-in used.

3. Set the VOLTS/DIV switch to display about four divisions of the waveform.

4. Set the 7B70 triggering controls to obtain a stable display.

5. Set the TIME/DIV switch to the fastest sweep rate that displays less than eight divisions between the time measurement points (see Fig. 2-8). (See the topic entitled Horizontal Sweep Rate in this section concerning nonlinearity of first and last divisions of a display.)

6. Adjust the vertical POSITION control to move the points between which the time measurement is made to the center horizontal reference line.

7. Adjust the horizontal POSITION control to position the time-measurement points within the center eight divisions of the graticule.

8. Measure the horizontal distance between the time measurement points. Be sure the A VARIABLE control is set to CAL.

9. Multiply the distance measured in step 8 by the setting of the TIME/DIV switch. If sweep magnification is used, divide this answer by 10.

Example. Assume that the distance between the time measurement points is five divisions (see Fig. 2-10), and the TIME/DIV switch is set to .1 ms with the magnifier to X1. Using the formula:

$$\text{Time Duration} = \frac{\text{horizontal distance (divisions)} \times \text{TIME/DIV setting}}{\text{magnification}}$$

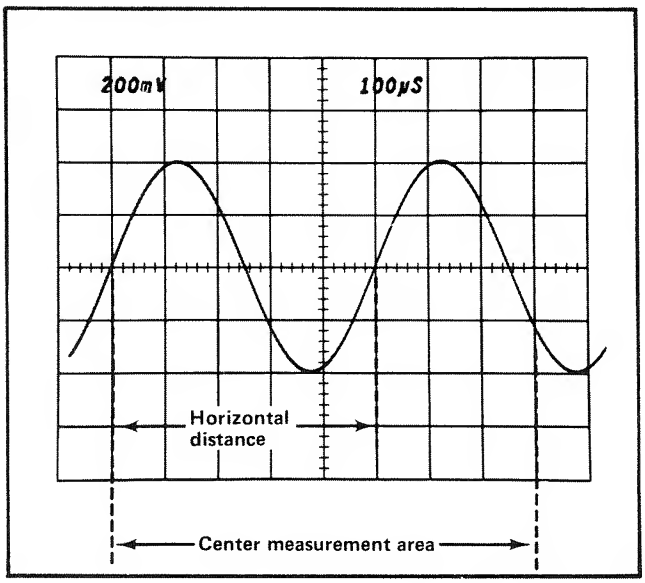

Fig. 2-10. Measuring the time duration between points on a waveform.

Substituting the given values:

$$\text{Time Duration} = \frac{5 \times 0.1 \text{ ms}}{1}$$

The time duration is 0.5 milliseconds.

Determining Frequency

The time measurement technique can also be used to determine the frequency of a signal. The frequency of a periodically recurrent signal is the reciprocal of the time duration (period) of one complete cycle.

Use the following procedure:

1. Measure the time duration of one complete cycle of the waveform as described in the previous application.

2. Take the reciprocal of the time duration to determine the frequency.

Example. The frequency of the signal shown in Fig. 2-10 which has a time duration of 0.5 milliseconds is:

$$\text{Frequency} = \frac{1}{\text{time duration}} = \frac{1}{0.5 \text{ ms}} = 2 \text{ kilohertz}$$

Risetime Measurements

Risetime measurements employ basically the same techniques as time-duration measurements. The main difference is the points between which the measurement is made. The following procedure gives the basic method of measuring risetime between the 10% and 90% points of the waveform. Falltime can be measured in the same manner on the trailing edge of the waveform.

1. Connect the signal to either Vertical plug-in.

2. Set the MODE switch to display the plug-in used.

3. Set the VOLTS/DIV switch and the VARIABLE control to produce a signal an exact number of divisions in amplitude.

4. Center the display about the center horizontal line with the vertical POSITION control.

5. Set the Triggering controls to obtain a stable display.

6. Set the TIME/DIV switch to the fastest sweep rate that displays less than eight divisions between the 10% and 90% points on the waveform.

7. Determine the 10% and 90% points on the rising portion of the waveform. The figures given in Table 2-1 are for the points 10% up from the start of the rising portion and 10% from the top of the rising portion (90% point).

TABLE 2-1

Risetime Measurements

Vertical display (divisions)	10% and 90% points	Divisions vertically between 10% and 90% points
4	0.4 and 3.6 divisions	3.2
5	0.5 and 4.5 divisions	4.0
6	0.6 and 5.4 divisions	4.8

8. Adjust the horizontal POSITION control to move the 10% point of the waveform to the center measurement area. For example, with a five-division display as shown in Fig. 2-11, the 10% point is 0.5 division up from the start of the rising portion.

9. Measure the horizontal distance between the 10% and 90% points. Be sure the A VARIABLE control is set to CAL.

10. Multiply the distance measured in step 9 by the setting of the TIME/DIV switch. If sweep magnification is used, divide this answer by 10.

Example. Assume that the horizontal distance between the 10% and 90% points is three divisions (see Fig. 2-11) and the TIME/DIV switch is set to 1 μs with the MAG switch set to X10. Applying the time duration formula to risetime:

$$\text{Time Duration (Risetime)} = \frac{\text{horizontal distance (divisions)} \times \text{TIME/DIV setting}}{\text{magnification}}$$

Substituting the given values:

$$\text{Risetime} = \frac{3 \times 1 \ \mu\text{s}}{10}$$

The risetime is 0.3 microsecond.

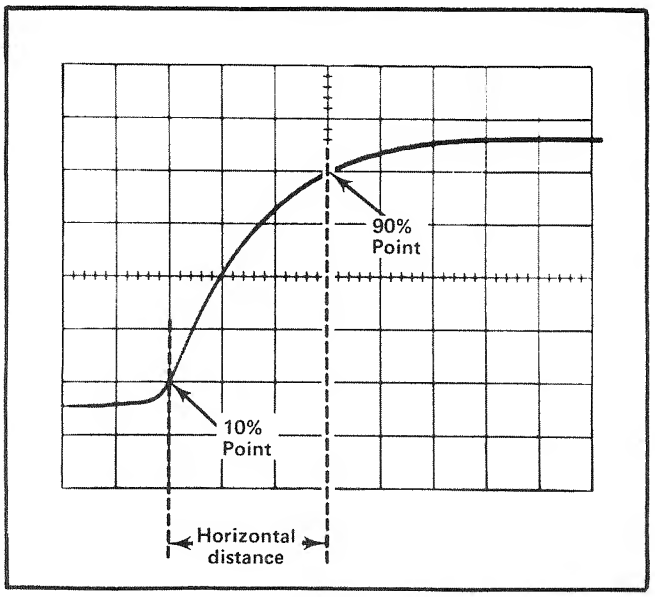

Fig. 2-11. Measuring risetime.

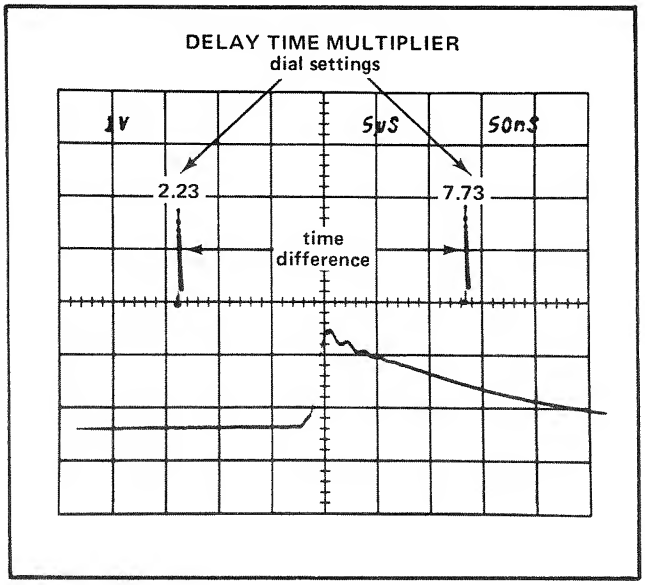

Fig. 2-12. Measuring time difference using delayed sweep.

Delayed Sweep Time Measurements

The delayed sweep mode can be used to make accurate time measurements. The following measurement determines the time difference between two pulses displayed on the same trace. This application may also be used to measure time difference from two different sources (dual-trace) or to measure time duration of a single pulse. See Section 1 for measurement accuracy.

1. Connect the signal to either vertical plug-in. Set the Indicator Oscilloscope vertical MODE selector to display the plug-in being used. Set the horizontal MODE selector to CHOP or ALT (see Oscilloscope Manual discussion on horizontal mode switching) to display both Time-Base sweeps.

2. Set the VOLTS/DIV selector to produce a display about three divisions in amplitude (see Fig. 2-12).

3. Set the A TIME/DIV to a sweep rate which displays about six divisions between pulses. Adjust the A Triggering controls for a stable display.

4. Set the A Time-Base B DELAY MODE selector to B STARTS AFTER DELAY.

5. Set the 7B70 (B) TIME/DIV to a setting 1/100 of the A TIME/DIV sweep rate. This produces an intensified portion about 0.1 division in length.

NOTE

Do not change the A LEVEL control setting or the horizontal POSITION control setting in the following steps, as the measurement accuracy will be affected.

6. Turn the DELAY-TIME MULTIPLIER dial to move the intensified portion of the A sweep to the first pulse.

7. Adjust the DELAY-TIME MULTIPLIER dial to move the pulse (or rising portion) of the B sweep to the center vertical line. Note the setting of the DELAY-TIME MULTIPLIER dial.

8. Turn the DELAY-TIME MULTIPLIER dial clockwise until the second pulse is positioned to this same point (if several pulses are displayed, observe the intensified portion of the A sweep to locate the correct pulse). Again note the dial setting.

9. Subtract the first dial setting from the second and multiply by the delay time shown by the A TIME/DIV selector. This is the time interval between the pulses.

Example: Assume the first dial setting is 2.23 and the second dial setting is 7.73 with the TIME/DIV set to 5 μs (see Fig. 2-12).

Using the formula:

$$\text{Time Difference (delayed sweep)} = (\text{second dial setting} - \text{first dial setting}) \times (\text{delay time (A TIME/DIV setting)})$$

Substituting the given values:

Time Difference = (7.73 – 2.23) X 5 μs.

The time difference is 27.5 microseconds

Delayed Sweep Magnification

The delayed sweep feature can be used to provide higher apparent magnification than is provided by the MAG switch. The sweep rate of the DELAYED SWEEP (7B70) is not actually increased; the apparent magnification is the result of delaying the B sweep an amount of time selected by the A TIME/DIV switch and the DELAY-TIME MULTIPLIER dial before the display is presented at the sweep rate selected by the B TIME/DIV switch. The following method uses the B STARTS AFTER DELAY position to allow the delayed portion to be positioned with the DELAY-TIME MULTIPLIER dial. If there is too much jitter in the delayed display, use the Triggered Delayed Sweep Magnification procedure.

1. Connect the signal to either vertical plug-in. Set the Indicator Oscilloscope vertical MODE selector to display the plug-in used and the horizontal MODE to CHOP or ALT to display both Time-Base sweeps.

2. Set the VOLTS/DIV selector to produce a display about three divisions in amplitude.

3. Set the A Time-Base B DELAY MODE selector to B STARTS AFTER DELAY. Adjust the A Triggering controls for a stable display.

4. Set the A TIME/DIV to a sweep rate which displays the complete waveform.

5. Position the start of the intensified portion with the DELAY-TIME MULTIPLIER dial to the part of the display to be magnified.

6. Set the 7B70 TIME/DIV to a setting which intensifies the full portion to be magnified. The start of the intensified trace remains as positioned above.

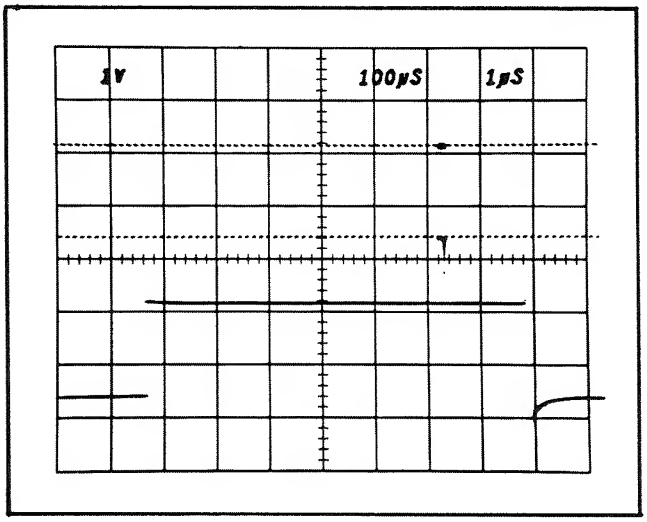

Fig. 2-13. Using delayed sweep for sweep magnification.

7. Time measurements can be made from the display in the conventional manner. Sweep rate is determined by the setting of the 7B70 TIME/DIV selector.

Example: The apparent magnification of the display shown in Fig. 2-13 with an A TIME/DIV setting of .1 ms and a B TIME/DIV setting of 1 μs is:

$$\text{Apparent Magnification (Delayed Sweep)} = \frac{\text{A TIME/DIV setting}}{\text{B TIME/DIV setting}}$$

Substituting the given values:

$$\text{Apparent Magnification} = \frac{1 \times 10^{-4}}{1 \times 10^{-6}} = 100$$

The apparent magnification is 100 times.

Triggered Delayed Sweep Magnification. The delayed sweep magnification method just described may produce too much jitter at high apparent magnification ranges. The B TRIGGERABLE AFTER DELAY position of the A Time-Base B DELAY MODE selector provides a more stable display, since the delayed display is triggered at the same point each time.

1. Set up the display as given in steps 1 through 6 above.

2. Set the B DELAY MODE selector to B TRIGGERABLE AFTER DELAY.

3. Adjust the B LEVEL SLOPE control so the intensified portion on the trace is stable.

4. Inability to intensify the desired portion indicates that the 7B70 Triggering controls are incorrectly set or the signal does not meet the triggering requirements. If the condition cannot be remedied with the B Triggering controls or by increasing the display amplitude (lower VOLTS/DIV setting), trigger the B sweep externally.

5. Measurement and magnification are as described above.

Displaying Complex Signals Using Delayed Sweep

Complex signals often consist of a number of individual events of differing amplitudes. Since the trigger circuits are sensitive to changes in signal amplitude, a stable display can normally be obtained only when the sweep is triggered by the event(s) having the greatest amplitude. However, this may not produce the desired display of a lower-amplitude portion which follows the triggering event. The delayed sweep feature provides a means of delaying the start of the B sweep by a selected amount following the event which triggers the A Sweep. Then, the part of the waveform which contains the information of interest can be displayed.

Use the following procedure:

1. Set up the display as given in Delayed Sweep Magnification Steps 1 through 6.

2. Time measurements can be made from the display in the conventional manner. Sweep rate is determined by the setting of the 7B70 TIME/DIV selector.

Example. Fig. 2-14 shows a complex waveform as displayed on the CRT. The intensified portion of the waveform cannot be viewed in any greater detail because the sweep is triggered by the larger amplitude pulses at the start of the display and a faster sweep rate moves this area of the waveform off the viewing area. The second waveform shows the area of interest magnified 500 times using Delayed Sweep. The DELAY-TIME MULTIPLIER dial has been adjusted so the delayed sweep starts just before the area of interest.

Pulse Jitter Measurements

In some applications it is necessary to measure the amount of jitter on the leading edge of a pulse or jitter between pulses.

1. Set up the display as in the above procedure.

2. Set the B DELAY MODE selector to B STARTS AFTER DELAY. Slight readjustment of the B Triggering LEVEL control may be necessary to produce as stable a display as possible.

3. Pulse jitter is shown by horizontal movement on the pulse (take into account inherent jitter of Delayed Sweep). Measure the amount of horizontal movement. Be sure both VARIABLE TIME/DIV controls are set to CAL.

4. Multiply the distance measured in step 3 by the B TIME/DIV switch setting to obtain pulse jitter in time.

Example. Assume that the horizontal movement is 0.5 division (see Fig. 2-15), and the B TIME/DIV switch setting is .5 μs.

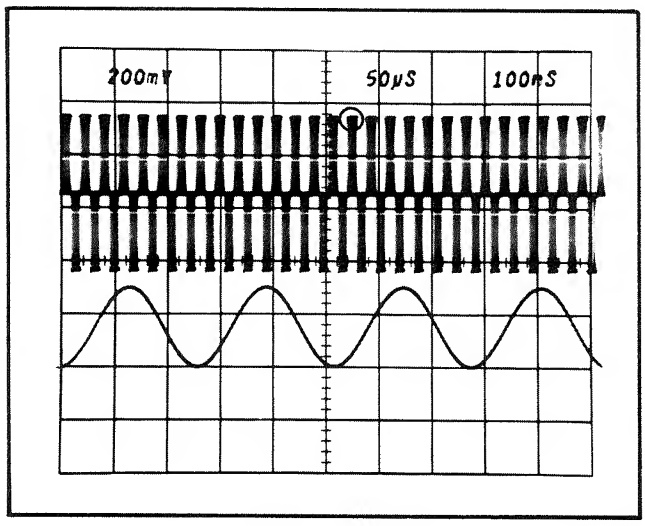

Fig. 2-14. Displaying a complex signal using delayed sweep.

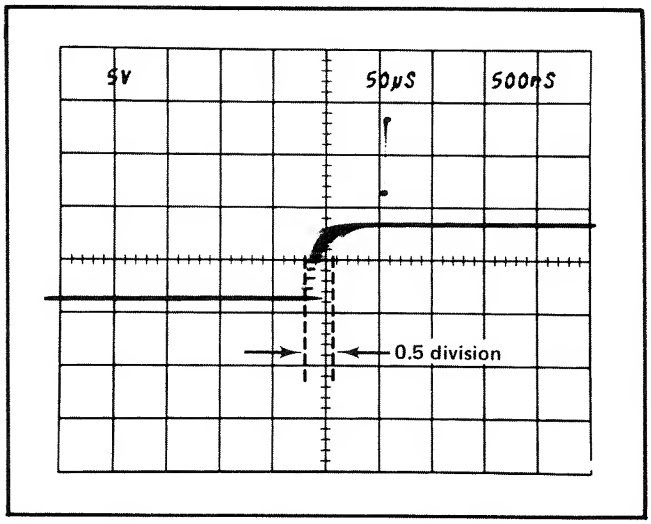

Fig. 2-15. Measuring pulse jitter.

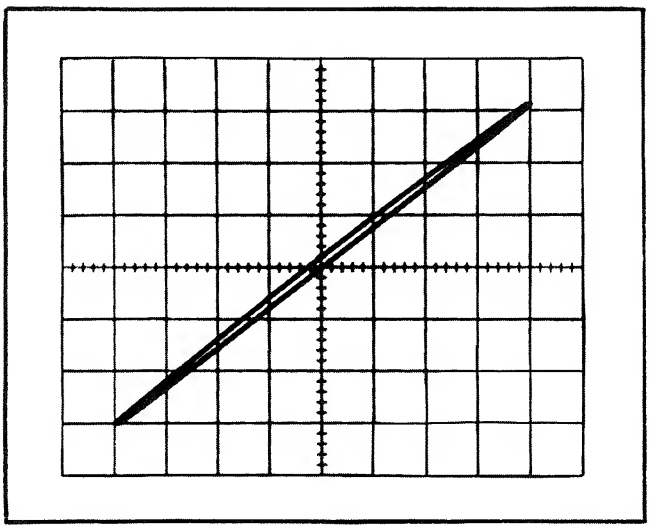

Fig. 2-16. X-Y display showing phase shift.

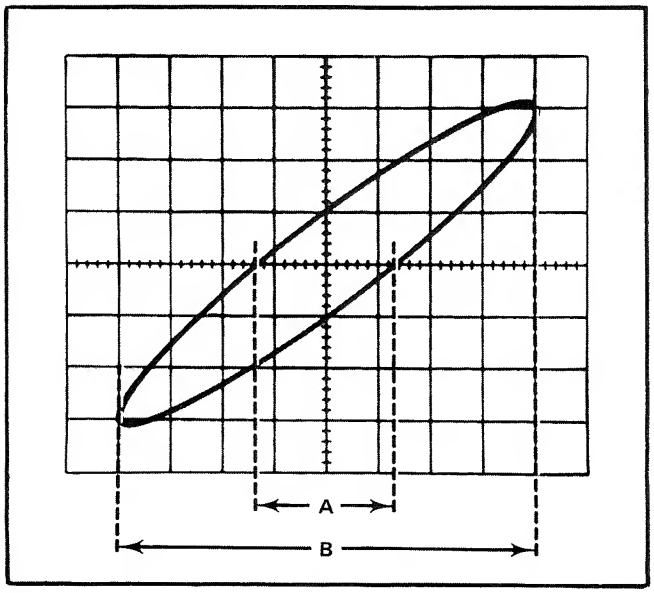

Fig. 2-17. Phase-difference measurement from an X-Y display.

Using the formula:

$$\text{Pulse Jitter} = \text{horizontal jitter (divisions)} \times \text{B TIME/DIV setting}$$

Substituting the given values:

$$\text{Pulse Jitter} = 0.5 \times 0.5\ \mu s$$

The pulse jitter is 0.25 microseconds.

X-Y Phase Measurements

The X-Y phase measurement method can be used to measure the phase difference between two signals of the same frequency. In this mode, one of the sine-wave signals provides horizontal deflection (X) while the other signal provides the vertical deflection (Y). The phase angle between the two signals can be determined from the lissajous pattern as follows:

1. Place one 7B70 in the horizontal compartment and another 7B70 (or a vertical unit) in the vertical compartment of the oscilloscope.

2. Set both 7B70 controls as follows:

DISPLAY MODE	AMPLIFIER
COUPLING	AC
SOURCE	EXT

3. Connect the same signal to both EXT VOLTS IN connectors. Use the Amplifier VARIABLE controls to obtain a display less than 8 divisions vertically and less than 10 divisions horizontally. Measure and record the inherent phase shift for the oscilloscope system being used. See Fig. 2-16.

4. Connect the Y signal to the 7B70 in the vertical compartment and the X signal to the 7B70 in the horizontal compartment.

5. Center the display in relation to the vertical graticule line. Measure the distances A and B as shown in Fig. 2-17. Distance A is the horizontal measurement between the two points where the trace crosses the center horizontal reference line. Distance B is the horizontal width of the display.

6. Divide A by B to obtain the sine of the phase angle between the two signals. Obtain the phase angle from a trigonometric table and subtract the inherent phase shift to obtain the actual phase difference.

Example. The phase angle shown in Fig. 2-16 is approximately 2° and in Fig. 2-17 the phase angle is 18°.

Measured Phase Angle	—	Inherent Phase Shift	=	Actual Phase Angle
18°		2°		16°

SECTION 3
CIRCUIT DESCRIPTION

Change information, if any, affecting this section will be found at the rear of the manual.

Introduction

This section of the manual contains a description of the circuitry used in the 7B70. Detailed block diagrams are used to show the interconnections between the stages in each major circuit and the relationship of the front-panel controls to the individual stages.

A complete block diagram is located in the Diagrams Section at the rear of this manual. This diagram shows the overall relationship between all of the circuits. Complete schematics of each circuit are also given in the Diagrams Section. Refer to these diagrams throughout the following circuit description for electrical values and relationship.

BLOCK DIAGRAM

General

The following discussion of the block diagram at the back of this manual is provided to aid in understanding the overall concept of the 7B70 before the individual circuits are discussed in detail. Each block represents a major circuit within this instrument.

The selection of INTERNAL or EXTERNAL triggering is made in the Trigger Input circuit. This stage also sets the gain and DC balance of the external trigger input. To increase the range of the external trigger input, a 10X attenuator network is incorporated in the input of the external trigger amplifier.

The Trigger Amplifier circuit provides amplification and waveshaping of the selected input trigger signal. Level centering, slope selection and coupling controls are contained in this circuit.

The Peak Detector provides the logic necessary for P-P AUTO mode operation. The peak sensing circuits set the range of the LEVEL control to allow triggering over most of the range of the input signal. This circuit contains level, mode, coupling and source controls.

The Trigger Generator circuits produce an output pulse which initiates the sweep signal produced by sweep generator circuits. The sweep gate multivibrator produces a Sweep Gate for use by the indicator oscilloscope. The bright-line auto feature which provides a free-running trace in the absence of triggering signals is contained in this stage. The TRIG'D light is also connected to the bright-line auto circuit to indicate the presence of a trigger signal.

The Sweep Generator circuit produces a linear sawtooth output signal when initiated by the trigger generator. The slope of the sawtooth produced by the sweep generator is controlled by the TIME/DIV switch setting. The operating mode of the sweep generator is controlled by the TRIGGERING MODE switch. In the P-P AUTO and AUTO positions, the absence of a trigger signal causes the sweep to free run. In the NORM position, a horizontal sweep is initiated only when triggered by an adequate trigger signal. The SINGLE SWEEP position allows only one sweep to be initiated after the circuit is reset with the RESET button or by the remote reset control.

The Horizontal Preamp is a single-ended to push-pull amplifier. The output of the sweep generator circuit is amplified by this circuit to produce horizontal deflection for the oscilloscope. This circuit contains a 10 times magnifier to increase the sweep rate ten times in any TIME/DIV switch setting. Horizontal positioning is incorporated in this stage.

DETAILED CIRCUIT DESCRIPTION

General

The following circuit analysis is written around the detailed block diagrams which are given for each major circuit. These detailed block diagrams give the names of the individual stages within the major circuits and show how they are connected together. The block diagrams also show the inputs and outputs for each major circuit and the relationship of the front panel controls to the individual stages. The names assigned to the individual stages on the detailed block diagrams are used throughout the following discussion.

TRIGGER INPUT

Input Source

The internal trigger signal from the vertical deflection system is coupled directly through this stage to the trigger amplifier. The external trigger signal can be AC or DC

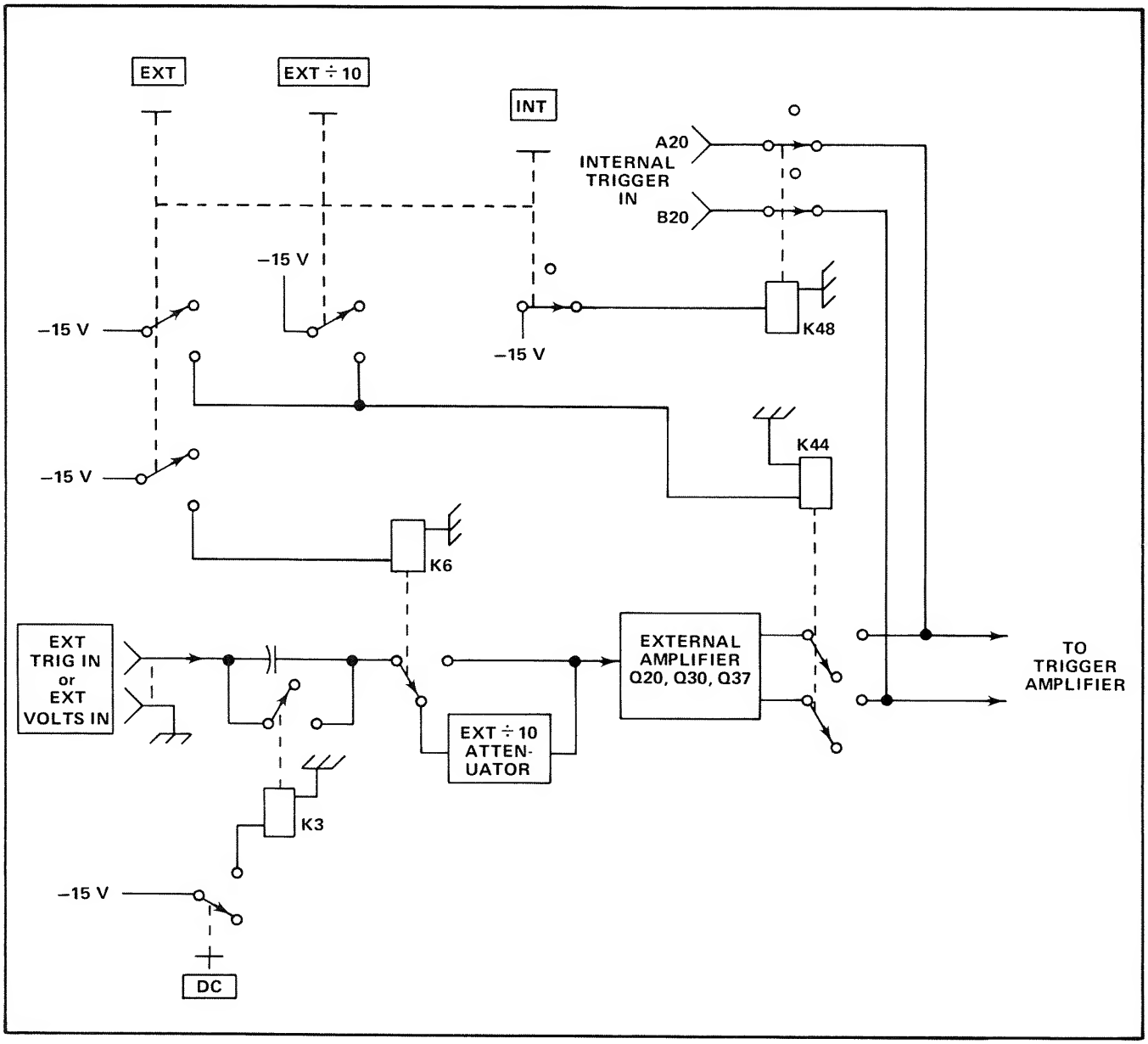

Fig. 3-1. Simplified block diagram of the trigger input.

coupled to the external input amplifier. See Fig. 3-1 for a simplified block diagram of the Trigger Input Stage.

External Input Amplifier

The external signal is converted from single-ended to push-pull by paraphase amplifier, Q20A and Q20B. The gain of this amplifier is set by R25 for a push-pull gain of 0.2. R37 is used to DC balance the output and is adjusted for a voltage null between the push-pull output lines. A divide-by-10 attenuator network in the input to this amplifier can be selected by the front panel EXT ÷10 push-button to extend the triggering level range of the unit.

TRIGGER AMPLIFIER

General

The Trigger Amplifier circuit provides slope and level selection of the trigger signal applied to the Trigger Generator. The P-P AUTO feature is also incorporated in this circuit. Other controls provided in this circuit are AC LF REJ, DC, AC HF REJ and LINE TRIGGERING SOURCE. Fig. 3-2 shows a detailed block diagram of the Trigger Amplifier circuit. A schematic of this circuit is shown on diagrams 2 and 3 at the back of this manual.

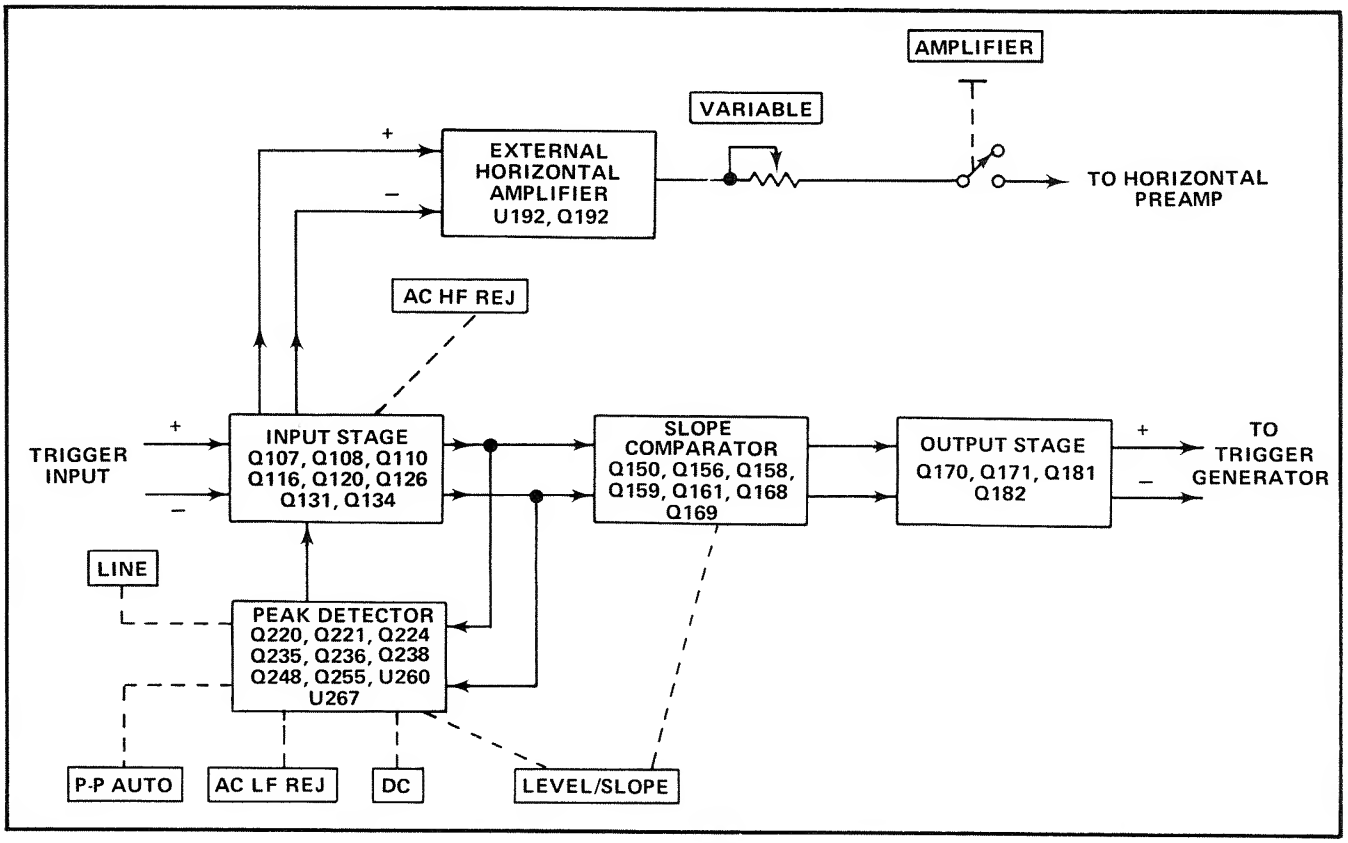

Fig. 3-2. Simplified block diagram of trigger amplifier.

Input Stage

The trigger signal (internal or external as selected by the SOURCE switch) is applied push-pull to the bases of Q107 and Q108. Impedance compensating networks R100, C100, L100 and R101 at the base of Q107 and R104, C104, L104 and R103 at the base of Q108 provide a 50 ohm input for the trigger signal. Q126 with a voltage divider network R126, R127, R128 provides a DC reference level for Q116. Q120, R119, R120, R121, R122 and the output of the peak detector circuit provides a variable voltage source for Q110. R121 is adjustable to DC balance this stage with the LEVEL control set to 9:00 o'clock (centered on the positive slope). Q110-R111 and Q116-R117 provide the current source for Q107 and Q108 respectively.

The AC HF REJ control, located in the output of the cascode Input Stage, engages C138 to provide attenuation of signals above 50 kHz.

Peak Detector

The triggering level, with the MODE switch set to P-P AUTO, is controlled by the Peak Detector stage. The signal from the trigger amplifier input stage is applied to the Peak Detector peak sensing network. The output of the Peak Detector sets the voltage applied to the LEVEL control (R146A) so that the range of the LEVEL control corresponds to the peak-to-peak amplitude or less of the input signal.

The positive portion of the input signal is inverted by the trigger input stage and applied through CR210 to the peak sensing network, C210 charges to the peak value of the input signal. The signal is amplified by Q220-Q224 and applied to the gate of source follower Q248. Current through Q248 decreases and the voltage at the wiper of R251 becomes more negative. This negative-going signal is inverted by operational amplifier U260, and applied to the top of the LEVEL control, R146A.

At the end of the positive input signal the voltage at the source of Q248 rises at a rate determined by C248 and R241. The feedback from the source of Q248 aids in holding the charge on C210. For signals with a repetition rate of about 200 hertz or greater, the peak sensing network will remain charged to the peak level of the input signal.

The negative portion of the input signal is applied in-phase to the Peak Detector. The operation of the peak

sensing network is the same as that described for the peak positive sensing network. The output at the source of Q255 is applied to the bottom of LEVEL control R146A as a negative-going voltage which represents the peak negative value of the signal input.

MODE, COUPLING and SOURCE controls are included in the output stage of the Peak Detector.

Slope Comparator

The Slope Comparator is the electronic equivalent of a double-pole double-throw switch. With the SLOPE switch set for positive slope triggering, Q158-Q159 are on and Q161-Q168-Q169 are off. For negative slope triggering, Q161-Q168-Q169 are on and Q158-Q159 are off. R155 adjusts the negative P-P AUTO triggering when the LEVEL/SLOPE control is set to the negative slope.

Output Stage

The output of the slope comparator is applied through the Output Stage to the trigger generator circuit. Diodes CR181 and CR182 limit the push-pull output of the trigger amplifier to about one volt peak-to-peak.

TRIGGER GENERATOR

Trigger Pulse Generator

The Trigger Pulse Generator (see Fig. 3-3) shapes the output of the Trigger Amplifier to provide a trigger pulse with a fast leading edge. Tunnel diode VR304 is quiescently in its low-voltage state. The signal from the Trigger Amplifier switches it to its high-voltage state causing a negative-going fast rise pulse at the base of Q317 and a positive-going pulse at the base of Q309. The output of the Trigger Pulse Generator, at the collector of Q317, is a positive-going fast rise pulse which is applied to the Sweep Gate Stage. The output at the collector of Q309 is a negative-going pulse which is applied to the bright-line Auto circuit. VR304 reverts back to its low-voltage state when the signal from the Trigger Amplifier decreases sufficiently. VR304 runs at the repetition rate of the input signal.

Sweep Gate Stage

The Sweep Gate Stage produces a negative-going step to start the Sweep Generator and a positive gate for use in the oscilloscope.

The positive-going pulse from the Trigger Pulse Generator enables CR319, opening an additional current path for

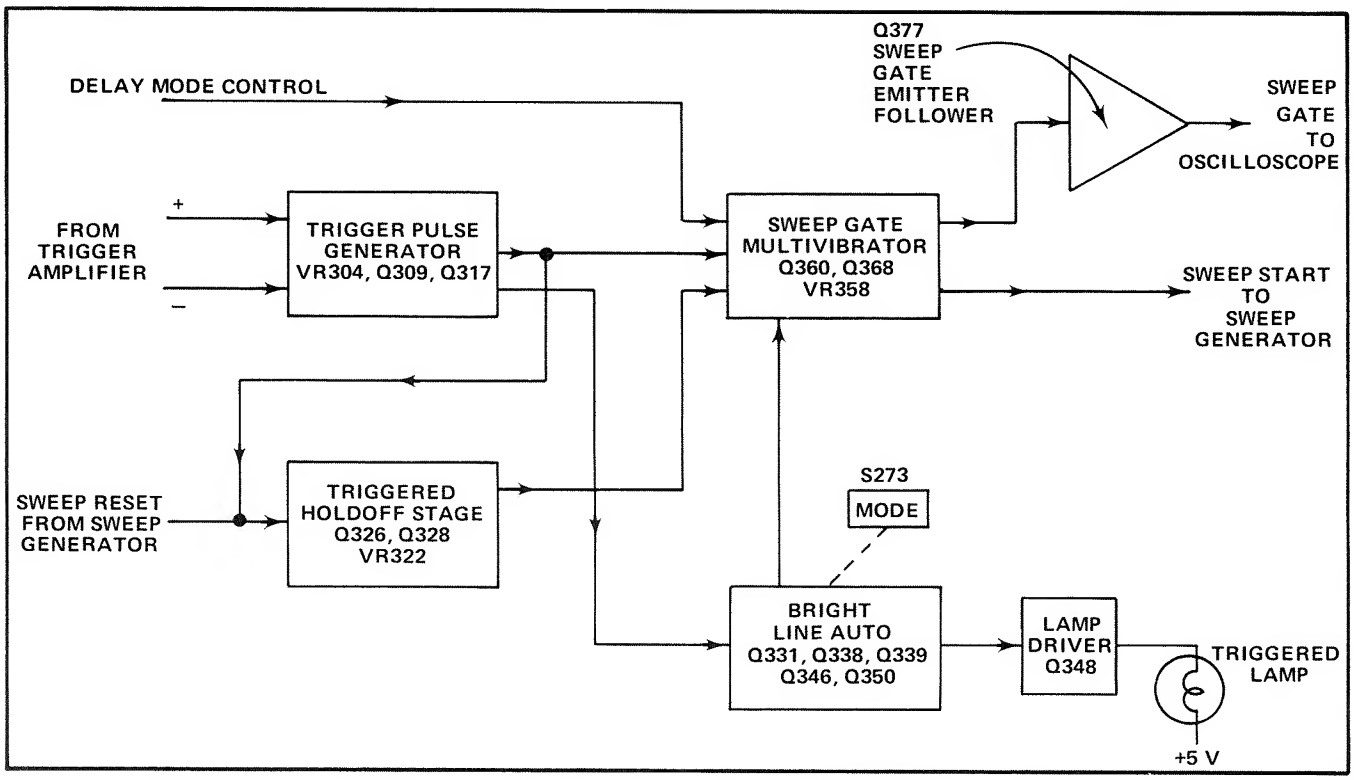

Fig. 3-3. Simplified block diagram of Trigger Generator circuit.

VR358, the sweep gate tunnel diode. VR358 switches to its high-voltage state applying a positive signal to the base of Q360 (part of the bistable sweep gate multivibrator). The collector voltage of Q360 decreases, producing the negative-going step used to enable the Sweep Generator. When Q360 turns on, emitter-coupled Q368 is turned off to produce the positive edge of the sweep gate output. The sweep gate multivibrator remains in this stage, Q360 on and Q368 off, until it is reset by the sweep reset multivibrator (part of the Sweep Generator) at the end of the sweep.

At the end of the sweep, the negative-going lockout gate from the sweep reset multivibrator is applied to the base of Q326, turning it off. Emitter-coupled Q328 is turned on taking current from the sweep gate tunnel diode, VR358, reverting it to its low-voltage state. This switches the sweep gate multivibrator back to its quiescent state (Q360 off and Q368 on). The circuit remains in this condition (VR358 in its low-voltage state) until the lockout gate returns to its high-level at the end of holdoff time.

Triggered Holdoff Stage

The Triggered Holdoff Stage re-arms the sweep gate TD, VR358, at the end of holdoff time. During holdoff time VR322 is in its high-voltage state, biasing Q326 off. At the end of holdoff time the lockout gate from the sweep reset multivibrator returns to its high level. This switches VR322 to its low-voltage state, turning Q326 on. Q328, which is emitter-coupled to Q326, is turned off to re-arm the sweep gate TD, VR358.

At high frequencies, double triggering may occur due to the finite risetime of the lockout gate as it returns to its high-level. To reduce the incidence of double triggering of the circuit, the trigger pulse from Q317 is differentiated by C324-R324 and super-imposed on the lockout gate at the cathode of VR322. Now the sweep is re-armed by one trigger pulse and triggered by the following trigger pulse, maintaining the proper time relationship between input signal and the start of the sweep.

Bright Line Auto

The operation of the sweep gate stage in the P-P AUTO and AUTO MODE is the same as for NORM MODE just described when an adequate trigger signal is present. However, when a trigger signal is not present, a free-running trace is produced in the P-P AUTO and AUTO MODES.

With no trigger signal applied to the circuit, Q331, Q338 and Q339 are off. This allows C339 to charge toward the positive 15 volt supply. As the top of C339 becomes more positive, CR342 is turned on making the base of Q346 move positive to cutoff. Emitter-coupled Q350 is turned on and the additional current through VR358 switches the TD to its high-voltage state, automatically retriggering the sweep each time the lockout gate goes to its high level. The result is that the sweep generator circuit is automatically retriggered at the end of each holdoff period and a free-running trace is produced. Since the trace free-runs at the sweep rate of the sweep generator circuit (as selected by the TIME/DIV switch), a bright reference trace is produced at all sweep rates. The sweep TRIGGERED lamp will not be lit, indicating an untriggered condition.

The sweep TRIGGERED lamp is lit each time an adequate trigger signal is applied to the Pulse Generator. When the trigger signal switches VR304 to its high-voltage state, Q309 is turned off. This turns on Q331, Q338 and Q339. The top of C339 becomes less positive, turning off CR342. Q346 is turned on and its collector goes positive, turning on Q348. Q348 collector current lights the sweep TRIGGERED lamp. When Q346 turns on its emitter voltage decreases, and emitter-coupled Q350 is turned off to disconnect the bright line auto circuit from the sweep gate stage.

When the TRIGGERING MODE switch is in the NORM or SINGLE SWEEP position, the anode of CR355 is clamped to ground. This reverse-biases CR355 and disconnects the bright line auto circuit from the sweep gate stage but allows the TRIG'D light to function.

EXTERNAL HORIZONTAL AMPLIFIER

When the DISPLAY MODE switch is set to AMPLIFIER, the +15 volts is disconnected from the base of Q370 turning off the sweep gate multivibrator current source. This disables the Sweep Generator circuit. The Trigger Amplifier is disabled by removing the +15 volts from the junction of R148-R149. The indicator oscilloscope knob readout for the 7B70 is also disabled by applying +15 volts through R197 to the column current output, interface connector A37.

The signal, external or internal as selected by the SOURCE switch, is applied push-pull to operational amplifier U192. A DC level adjustment (R186), located in the input to U192, provides a means of adjusting the amplifier for minimum horizontal movement of the spot as the VARIABLE control is rotated. U192 converts the push-pull input to a single-ended output for use in the Horizontal Preamp.

The output of the External Horizontal Amplifier is passed through the VARIABLE control (R194). This control varies the output of the amplifier by a factor of up to 10. With the VARIABLE control fully clockwise the deflection factor is about 25 millivolts per division, and with the VARIABLE control fully counterclockwise the deflection factor is about 250 millivolts per division.

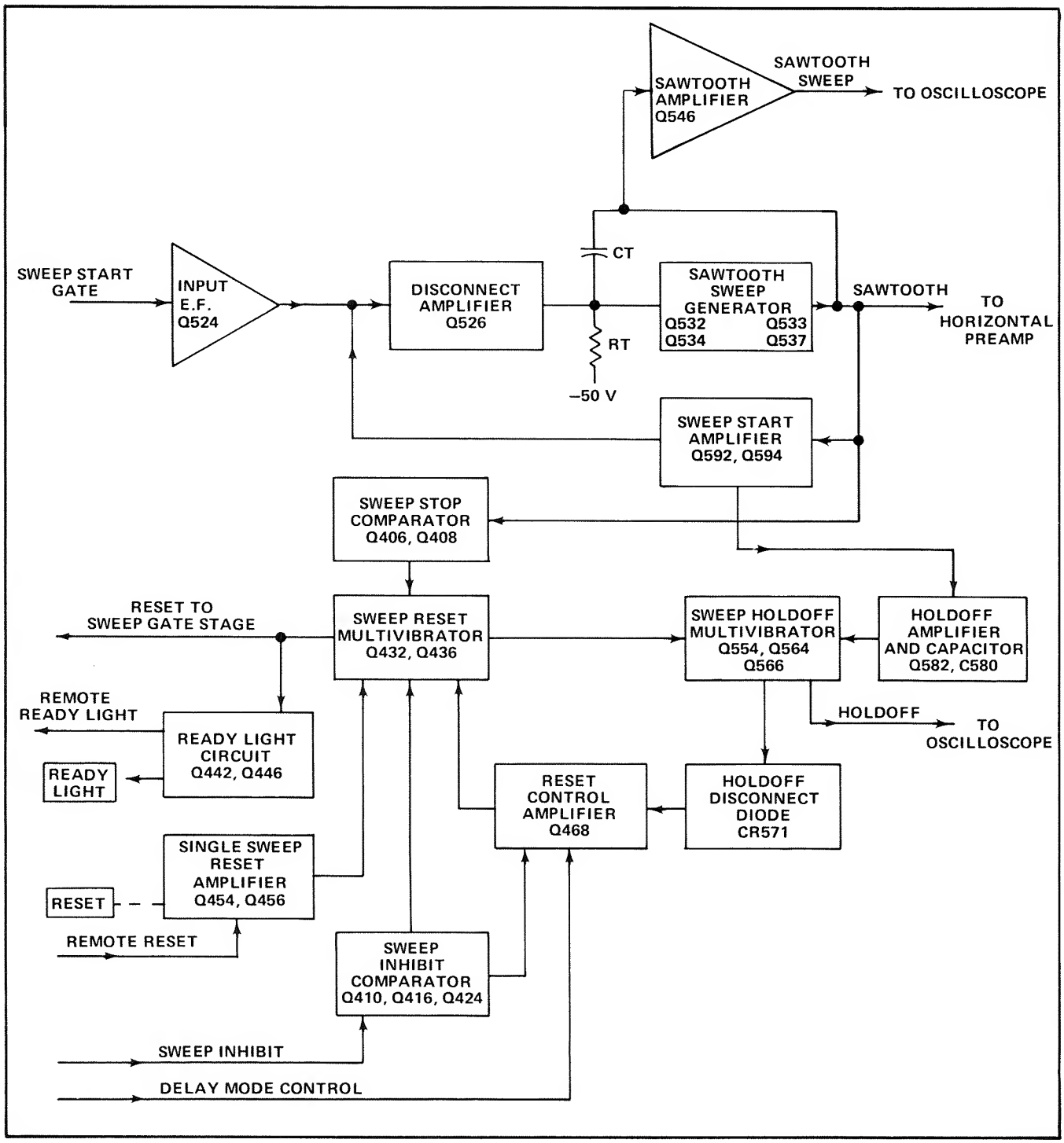

Fig. 3-4. Sweep Generator block diagram.

TIME-BASE GENERATOR

General

The Time-Base Generator circuit (see Fig. 3-4) produces a sawtooth voltage which is changed from single-ended to push-pull by the Horizontal Preamp and used by the Indicator Oscilloscope to provide horizontal sweep deflection on the CRT. In addition this circuit produces various control signals for use by the Indicator Oscilloscope as well as internal signals for use in the Plug-in.

Normal Trigger Mode Operation

Disconnect Amplifier. The Disconnect Amplifier, Q526, is quiescently conducting current through R523 and the Timing Resistor, R530. The negative-going step from the Sweep Gate Multivibrator is applied to the base of the input emitter-follower, Q524. Q524 couples the negative step to the emitter of Disconnect Amplifier Q526, turning it off. The timing current through Timing Resistor R530 now starts to charge Timing Capacitor C530, enabling the Time-Base Generator.

The Disconnect Amplifier is a low-leakage transistor to improve timing at low sweep speeds and high temperatures. At the end of the sweep, Q526 turns on, discharging the Timing Capacitor. CR525 provides isolation between the Disconnect Amplifier and the input emitter-follower during holdoff time.

Sawtooth Sweep Generator. The basic sweep generator circuit is a Miller Integrator Circuit.[1] The current flow through the Disconnect Amplifier is interrupted by the signal from the Sweep Gate Stage. The Timing Capacitor, C530, now begins to charge through Timing Resistor R530. The Timing Resistor and Timing Capacitor are selected by the TIME/DIV switch (a front panel control) to provide sweep rates as listed on the front panel.

As the Timing Capacitor begins to charge toward the voltage applied to the Timing Resistor, the gate of Q532A, which is tied to the junction of R530-C530, goes negative by the same amount. This decreases the current through Q532A, forcing more current through Q532B. This increase in Q532B drain current flowing through R534 gives a negative-going voltage at the base of Q533. This causes the collector voltage of Q533 to pull up. The positive side of the Timing Capacitor, being tied to the collector of Q534, is also pulled up. This action results in a positive-going voltage being applied across the Timing Capacitor, maintaining a constant charging current and giving a linear rate of rise to the sawtooth output signal. The sawtooth output signal continues to rise in this manner until the Sweep Gate Multivibrator is switched to turn on the Disconnect Amplifier.

The sawtooth output from the collector of Q534 is connected to the Horizontal Preamp, and through R539 to the Sweep Start Amplifier, Sweep Stop Comparator, and through amplifier Q546 to the Indicator Oscilloscope. CR528-CR529 protects against gate-source breakdown of Q532A.

[1] MILLMAN & TAUB pp 540-548.

Sweep Start Amplifier. Q592A sets the quiescent voltage of the sawtooth. The collector current of Q592A; flowing through R523, establishes the correct starting point of the sawtooth output signal. L593-R596 prevent oscillations at the faster sweep rates. They are paralleled with R592 at the slower sweep rates. CR594 and CR592 prevent base-emitter breakdown of Q592A and Q592B.

The sawtooth signal is applied through R539 to the base of Q592B. This positive-going signal causes Q594 to turn on, pulling down the collector voltage of Q592B and Q594.

The negative-going voltage at the collector of Q592 is applied through current-limiting diode CR581, to the base of Q582 to charge the holdoff capacitor.

Sweep Stop Comparator. The Sweep Stop Comparator is used to terminate the sawtooth sweep when the sweep has reached a pre-determined level. The circuit components are chosen to set the reference level for sweep termination at approximately 10.5 volts at the base of Q408. The positive-going sawtooth applied to the base of Q408 increases the current through R408-R409. The base of Q406, which is tied to the junction of R408-R409, rises an amount corresponding to the sawtooth amplitude at the base of Q408. This action continues until the emitter of Q406 becomes positive enough to forward bias CR406. When CR406 turns on, the positive rise at the base of Q436 switches the reset multivibrator. The voltage at the collector of Q436 goes negative and this negative-going step applied to the sweep gate circuit ends the sweep.

Holdoff Capacitor and Amplifier. Q582, which is turned on during sweep time, charges the holdoff capacitor. When the sweep ends, Q582 turns off. Now the holdoff capacitor starts to discharge toward −50 volts through R582 and at some sweep rates, through R580. When the top of C580 discharges negative enough to forward-bias CR574 and CR575, the holdoff capacitor voltage is applied to the base of Q554. This drives Q554 to cutoff, switching the holdoff multivibrator to end holdoff time. Voltage limiting diodes CR580 and CR582 protect the base-emitter junction of Q582. CR581 limits the "on" base current of Q582. VR576 and CR576 limit the negative voltage on holdoff capacitor C580.

The HF STAB control, R146B, through R583, varies the discharge rate of the holdoff capacitor to provide a stable display at fast sweep rates. This change in holdoff allows sweep synchronization for less display jitter at the faster sweep rates. The HF STAB circuit has little effect at slow sweep rates.

Sweep Holdoff Multivibrator. Q554-Q564 are connected in a bi-stable Schmitt Trigger configuration. Quiescently Q554 is off and Q564 is on. A positive pulse from the sweep reset multivibrator switches the holdoff multivibrator to its second stable state, Q554 on and Q564 off.

The sweep holdoff multivibrator is returned to its first stable state when the holdoff capacitor has charged negative enough to drive Q554 to cutoff. The fast switching action of the sweep holdoff multivibrator produces sharp leading and trailing edges for the sweep holdoff gate. The output of the multivibrator, coupled through emitter-follower Q566, goes to the indicator oscilloscope and to the holdoff disconnect diode.

During sweep time the voltage on the holdoff capacitor reverse-biases CR575 and the current in R573 switches to CR572, turning off Q468. VR573 determines the time when the current switch takes place. During holdoff time the holdoff disconnect diode, CR571, controls the current available to the reset control amplifier, Q468. The positive-going edge of the holdoff gate turns on CR571. This moves the emitter of Q468 positive, turning it off. At the end of holdoff time the negative-going edge of the holdoff gate opens CR571, making the current through R468 available to the reset control amplifier.

Reset Control Amplifier. Q468 provides current to the base of Q436 to switch the sweep reset multivibrator to its reset state. The current through R468 into the emitter of Q468 is controlled by CR571 and CR572 as stated above, or by CR468 as explained under single-sweep operation.

Sweep Reset Multivibrator. The sweep reset multivibrator, Q432-Q436, resets the sweep gate TD at the end of holdoff time. In the reset state, Q432 is off and Q436 is conducting. The top of R438 is pulled up to its high level. The sweep is terminated by current from Q406 moving the base of Q436 positive to cutoff. This switches the multivibrator to its other stable state, Q432 on and Q436 off. The voltage at the top of R438 drops negative to its low level. This negative step is applied to the sweep gate stage to latch the sweep gate TD in its low-voltage state.

At the end of holdoff time, Q468 is turned on, driving the base of Q436 less positive. This turns Q436 on and the multivibrator switches back to its reset state. The voltage at the top of R438 is pulled up to its high level. This positive-going step is applied to the Sweep Gate Stage to unlatch the Sweep Gate TD, and the sweep circuits are ready for the next sweep to start.

Single Sweep Operation

General. Operation of the Sweep Generator Circuit in the SINGLE SWEEP position of the TRIGGERING MODE switch is similar to operation in the other modes. However, after one sweep has been produced, the Sweep Reset Multivibrator Stage does not reset. All succeeding trigger pulses are locked out until the RESET button is pressed.

In the SINGLE SWEEP position of the MODE switch, the −15 volts is removed from the top of R464. CR466 is opened and CR468 becomes forward-biased, opening a current path through R468-CR468-R466. Now, at the end of holdoff, there is no current through Q468 to pull down the base of Q436 and the Sweep Reset Multivibrator does not reset. The circuit remains in this condition until reset by the Single Sweep Reset Amplifier Stage.

Single Sweep Reset Amplifier. The Single Sweep Reset Amplifier produces a negative pulse to reset the Sweep Reset Multivibrator stage so another sweep can be produced in the SINGLE SWEEP mode of operation.

Quiescently, Q454 is conducting hard and Q456 is held cut off. When the RESET button is pressed, CR451 is turned on. This clamps the junction of CR451-CR453 at +0.6 volt. CR453 and CR454 open and the base of Q454 drops to zero volts, turning it off. This turns Q456 on hard, pulling down its collector voltage. This negative-going step applied to C457-CR459 produces a negative pulse at the base of Q436 which is sufficient to reset the sweep reset multivibrator. This enables the sweep gate TD, and the next trigger pulse will produce another sweep on the display. C456 provides positive feedback with a long time-constant to keep Q454 off long enough to prevent switching transients from producing multiple sweeps.

Lamp Driver. In the SINGLE SWEEP MODE, the base of Q446 is connected through CR446, CR448 and CR449 to the collector of Q436. When Q436 is cut off, during holdoff time and until the RESET button is pressed, the base of Q446 is biased to cutoff. When the RESET button is pressed, Q436 is turned on and its collector voltage rises. This positive-going voltage allows Q446 to turn on (C446 controls turn-on time). Q446 collector voltage drops and the READY lamp turns on. The READY lamp remains on until the end of the sweep when Q436 is again turned off.

Alternate Operation

In alternate operation the indicator oscilloscope provides a sweep inhibit current to the emitter of Q410. Q410 provides a low impedance input and a voltage drive for the inhibit comparator, Q416 and Q424. A sweep inhibit current input of 1 mA or greater turns on Q410. This raises the base voltage of Q416, turning it on and turning Q424 off. The collector current of Q416 pulls the base of Q432 in a negative direction turning Q432 on and Q436 off to latch the sweep gate TD as described previously.

Delayed Sweep Operation

In this mode of operation the time-base in the left horizontal (A) compartment provides the sweep inhibit current to the emitter of Q410. The sweep inhibit circuit operates as described under Alternate Operation. The A time-base also provides a delay mode control voltage to the anode of CR462 in the sweep generator and CR357 in the trigger generator.

The delay mode control voltage causes CR462 to conduct, CR463 to turn off, CR464 to conduct and CR466 to turn off. This puts the B sweep in single sweep mode as described under Single Sweep Operation,

During sweep inhibit time Q424 is turned off. This turns off CR428, and with CR463 off the current from R428 turns on CR469. C469 now charges to about +1.5 volts, turning on Q468. This does not reset the sweep which is locked out by the conduction of Q416.

When sweep inhibit ends Q416 turns off, making the base of Q432 more positive. Q424 turns on to open CR469. C469 holds its charge long enough to allow Q468 to reset the sweep at the end of inhibit time. This action allows only one sweep after each time the sweep is inhibited.

The delay mode control voltage is also connected to the sweep gate TD, VR358, through CR357 and R356. With the A time-base B DELAY MODE in B TRIGGERABLE AFTER DELAY, the control voltage is about +3 volts, which does not cause CR357 to conduct. Thus, the sweep will wait for the first trigger after the delay interval to run. With the A time-base B DELAY MODE in B STARTS AFTER DELAY the control voltage is about +4.5 volts. This is sufficient to cause CR357 to conduct and increase the current through R356 to the sweep gate TD, VR358. Now the TD will change to its high-level state and start the sweep as soon as it is enabled by the sweep reset multivibrator at the end of inhibit current to Q410.

When the INDEPENDENT mode is selected by the A Plug-in DELAY MODE switch, the sweep inhibit is held at about the 0 mA level. The delay mode control voltage is clamped to ground. The A time-base has no control over the B time-base and each operates as an independent Time-Base.

HORIZONTAL PREAMP

Operational Amplifier, U752, provides horizontal positioning control current to Q784, one side of paraphase amplifier Q784-Q794. Current is determined by settings of horizontal POSITION controls R774A and R774B. A positive-going sawtooth from Q534 drives the base of Q794, the other side of the paraphase amplifier. This produces a push-pull sawtooth signal at terminals CF and CE to drive the oscilloscope main-frame. X10 magnification is provided when relay K780 is switched on, K780 shunts Q784-Q794 emitter-to-emitter resistance with an adjustable resistance (R785) which allows a calibrated gain of 10. Additional RC networks in the MAG position correct for thermal time constants. Magnifier Registration control R795 balances the output to eliminate trace shift when switching from X1 to X10 magnification.

When the DISPLAY MODE selector is set to AMPLIFIER, U752 and the paraphase amplifiers Q784-Q794 act as an amplifier for external horizontal input signals applied to J1.

READOUT BLOCK

The Readout Block consists of switching resistors and a set of contacts operated by the X10 MAG switch. The switching resistors, selected by the setting of the Readout Switch (part of the TIME/DIV switch), are used to signal the Indicator Oscilloscope of the setting of the TIME/DIV switch.

Refer to Schematic Diagram 7, Timing Switch, at the rear of the manual to find the resistors associated with a particular setting of the TIME/DIV switch. The number 1, 2 or 5 is selected by resistors R704-R705-R706. The number of zeros is selected by resistors R711-R712-R713-R715. The TIME sub-unit (milli, micro, or nano) is selected by resistors R721-R722-R723-R724. R728-R729 select the symbol S (seconds). R701-R702 select the symbol $\geqslant$ (greater than) when the VAR TIME/DIV knob is in the out (uncal) position. R715 is switched out by the X10 MAG to increase the displayed readout by a factor of 10.

SECTION 4
MAINTENANCE

Change information, if any, affecting this section will be found at the rear of the manual.

Introduction

This section of the manual contains maintenance information for use in preventive maintenance, corrective maintenance and troubleshooting of the 7B70.

PREVENTIVE MAINTENANCE

General

Preventive maintenance consists of cleaning, visual inspection, lubrication, etc. Preventive maintenance performed on a regular basis may prevent instrument breakdown and will improve the reliability of this instrument. The severity of the environment to which the 7B70 is subjected determines the frequency of maintenance. A convenient time to perform preventive maintenance is preceding recalibration of the instrument.

Cleaning

The 7B70 should be cleaned as often as operating conditions require. Accumulation of dirt in the instrument can cause overheating and component breakdown. Dirt on components acts as an insulating blanket and prevents efficient heat dissipation. It may also provide an electrical conduction path.

The covers of the indicator oscilloscope minimize the amount of dust which reaches the interior of the 7B70. Operation of the system without the indicator oscilloscope covers in place necessitates more frequent cleaning. When the 7B70 is not in use, it should be stored in a protected location such as a dust-tight cabinet.

CAUTION

Avoid the use of chemical cleaning agents which might damage the plastics used in this instrument. Avoid chemicals which contain benzene, toluene, xylene, acetone or similar solvents.

Exterior. Loose dust accumulated on the outside of the 7B70 can be removed with a soft cloth or small paint brush. The paint brush is particularly useful for dislodging dirt on and around the front-panel controls. Dirt which remains can be removed with a soft cloth dampened in a mild detergent and water solution. Abrasive cleaners should not be used.

Interior. Dust in the interior of the instrument should be removed occasionally due to its electrical conductivity under high-humidity conditions. The best way to clean the interior is to blow off the accumulated dust with dry, low-velocity air. Remove any dirt which remains with a soft paint brush or a cloth dampened with a mild detergent and water solution. A cotton-tipped applicator is useful for cleaning in narrow spaces.

Visual Inspection

The 7B70 should be inspected occasionally for such defects as broken connections, broken or damaged circuit boards, improperly seated transistors or relay, and heat-damaged parts.

The corrective procedure for most visible defects is obvious; however, particular care must be taken if heat-damaged components are found. Overheating usually indicates other trouble in the instrument; therefore, it is important that the cause of overheating be corrected to prevent a recurrence of the damage.

Transistor Checks

Periodic checks of the transistors in the 7B70 are not recommended. The best check of transistor performance is actual operation in the instrument. More details on checking transistor operation are given under Troubleshooting.

Recalibration

To ensure accurate measurements, check the calibration of this instrument after each 1000 hours of operation or every six months if used infrequently. In addition, replacement of components may necessitate recalibration of the affected circuits. Complete calibration instructions are given in Section 5.

The Performance Check/Calibration Procedure can also be helpful in localizing certain troubles in the instrument. In some cases, minor troubles may be revealed and/or corrected by calibration.

TROUBLESHOOTING

Introduction

The following information is provided to facilitate troubleshooting of the 7B70. Information contained in other sections of this manual should be used along with the following information to aid in locating the defective component. An understanding of the circuit operation is very helpful in locating troubles. See the Circuit Description section for complete information.

Troubleshooting Aids

Diagrams. Circuit diagrams are given on foldout pages in Section 7. The component number and electrical value of each component in this instrument are shown on the diagrams. Important voltages and waveforms are also shown on the diagrams.

Switch Cam Identification. Switch cam numbers shown on the diagrams indicate the position of the cam in the complete switch assembly. The cams are numbered from the front, or mounting end of the switch, toward the rear.

Resistor Color-Code. In addition to the brown composition resistors, some metal-film resistors and some wire-wound resistors are used in the 7B70. The resistance values of wire-wound resistors are printed on the body of the component. The resistance values of composition resistors and metal-film resistors are color-coded on the components (some metal-film resistors may have the value printed on the body) with EIA color code. The color code is read starting with the stripe nearest the end of the resistor. Composition resistors have four stripes which consist of two significant figures, a multiplier and a tolerance value (see Fig. 4-1). Metal-film resistors have five stripes consisting of three significant figures, a multiplier and a tolerance value.

Capacitor Marking. The capacitance values of common disc capacitors and small electrolytics are marked in microfarads on the side of the component body. The white ceramic capacitors used in the 7B70 are color coded in picofarads using a modified EIA code (see Fig. 4-1).

Diode Color Code. The cathode end of each glass-encased diode is indicated by a stripe, a series of stripes or a dot. For most silicon or germanium diodes with a series of

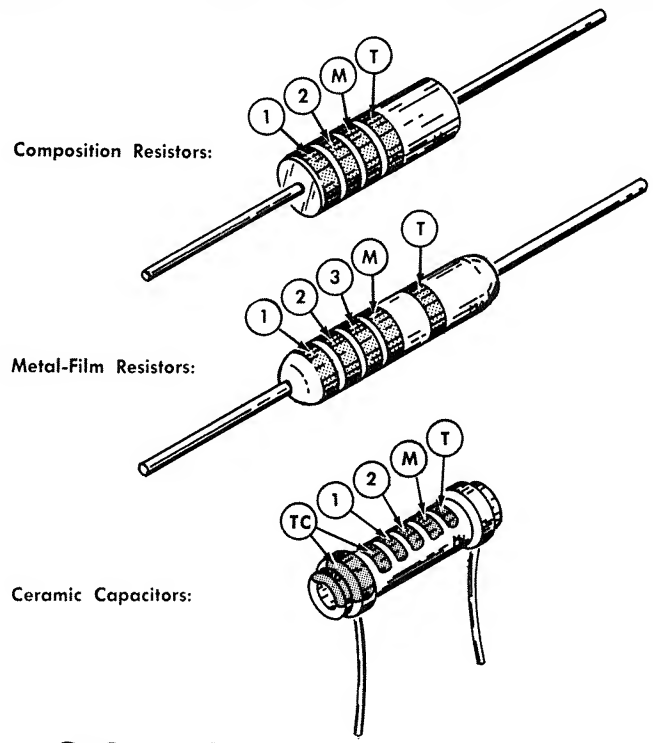

(1) (2) and (3) —1st, 2nd and 3rd significant figures;
(M) —multiplier; (T) —tolerance;
(TC) —temperature coefficient.

Resistor and Capacitor Color Code

Color	Significant Figures	Multiplier: Resistors	Multiplier: Capacitors	Tolerance: Resistors	Tolerance: Capacitors
Silver	---	10^{-2}	---	±10%	---
Gold	---	10^{-1}	---	±5%	---
Black	0	1	1	---	±20% or 2 pF*
Brown	1	10	10	±1%	±1% or 0.1 pF*
Red	2	10^{2}	10^{2}	±2%	±2%
Orange	3	10^{3}	10^{3}	±3%	±3%
Yellow	4	10^{4}	10^{4}	±4%	+100% −0%
Green	5	10^{5}	10^{5}	±0.5%	±5% or 0.5 pF*
Blue	6	10^{6}	10^{6}	---	---
Violet	7	---	---	---	---
Gray	8	---	10^{-2}	---	+80% −20% or 0.25 pF*
White	9	---	10^{-1}	---	±10% or 1 pF*
(none)	---	---	---	±20%	±10% or 1 pF*

*For capacitance of 10 pF or less.

NOTE: (T) and/or (TC) color code for capacitors depends upon manufacturer and capacitor type. May not be present in some cases.

Fig. 4-1. Color-code for resistors and ceramic capacitors.

stripes, the color code also indicates the type of diode or identifies the Tektronix Part Number using the resistor color code system (e.g., a diode color-coded blue- or pink-brown-gray-green indicates Tektronix Part Number 152-0185-00). The cathode and anode ends of metal-encased diodes can be identified by the diode symbol marked on the body.

Troubleshooting Equipment

The following equipment is useful for troubleshooting the 7B70:

1. Transistor Tester

Description: Tektronix Type 576 Transistor-Curve Tracer or equivalent.

Purpose: To test the simiconductors used in this instrument.

2. Volt-ohmmeter

Description: 20,000 ohms/volt. 0-500 volts DC. Accurate within 3%. Test probes must be well insulated.

Purpose: To measure voltages and resistances.

3. Test Oscilloscope

Description: DC to 200 MHz frequency response, 5 millivolts to 5 volts/division deflection factor. Use a 10X probe.

Purpose: To check waveforms in the instrument.

4. Plug-In Extender

Description: Rigid plug-in extender, Tektronix Part number 067-0589-00.

Purpose: Permits operation of the unit outside the plug-in compartment for better accessibility during troubleshooting.

Troubleshooting Techniques

This troubleshooting procedure is arranged in an order which checks the simple trouble possibilities before proceeding with extensive troubleshooting. The first few checks ensure proper connection, operation and calibration. If the trouble is not located by these checks, the remaining steps aid in locating the defective component. When the defective component is located, it should be replaced following the replacement procedures given under Corrective Maintenance.

1. Check Control Settings. Incorrect control settings can indicate a trouble that does not exist. If there is any question about the correct function or operation of any control, see the Operating Instructions section.

2. Check Associated Equipment. Before proceeding with troubleshooting of the 7B70, check that the equipment used with this instrument is operating correctly. Check that the signal is properly connected and that the probe cable is not defective. The indicator oscilloscope and vertical plug-in unit can be checked for proper operation by substituting another time-base unit which is known to be operating properly (perferably another 7B70 or similar unit). If the trouble persists after substitution, the indicator oscilloscope and/or vertical plug-in unit is defective.

3. Check Instrument Calibration. Check the calibration of this instrument, or the affected circuit if the trouble exists in one circuit. The apparent trouble may only be a result of misadjustment and may be corrected by calibration. Complete calibration instructions are given in the Calibration section.

4. Visual Check. Visually check the portion of the instrument in which the trouble is located. Many troubles can be located by visual indications such as unsoldered connections, broken wires, damaged components, etc.

5. Isolate Trouble to a Circuit. To isolate a trouble to a circuit, note the trouble symptom. The symptom often indicates the circuit in which the trouble is located. For example, if normal triggering can be obtained in the INT mode but cannot be obtained in the EXT mode, the external trigger amplifier or the SOURCE switch is probably at fault. When trouble symptoms appear, use the front-panel controls and the CRT display to try to isolate the trouble to one circuit. When the trouble appears in more than one circuit, check all affected circuits by taking voltage and waveform readings.

Fig. 4-2 provides a guide to aid in locating a defective circuit. This chart does not include checks for all possible defects; use steps 6 and 7 for further troubleshooting. Start from the top of the chart and perform the given checks on the left side of the page until a step is found which is not correct. Further checks and/or the circuit in which the trouble is probably located are listed to the right of this step.

After the defective circuit has been located, proceed with steps 6 and 7 to locate the defective component(s).

6. Check Voltages and Waveforms. Often the defective components can be located by checking for the correct

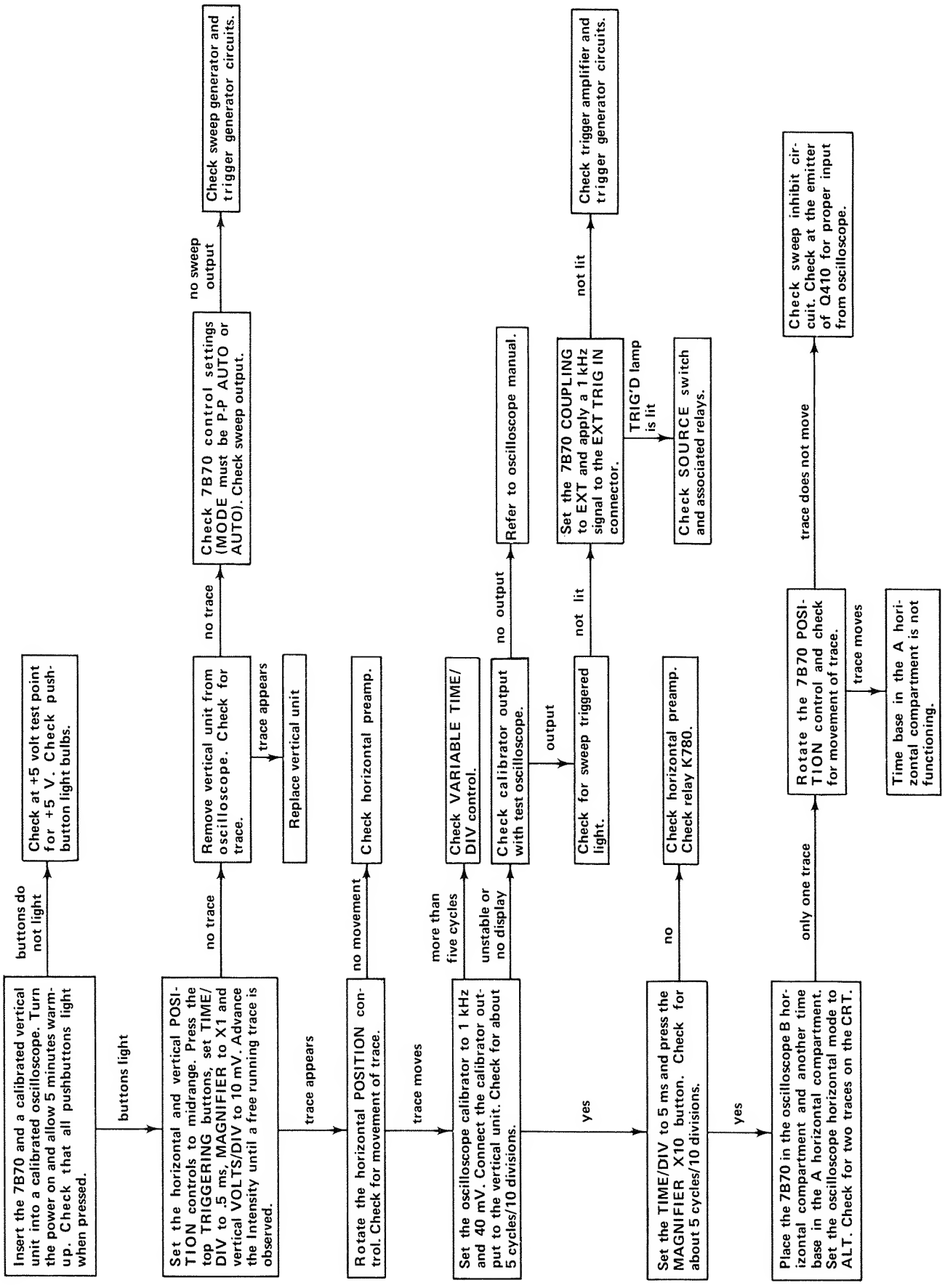

Fig. 4-2. Troubleshooting chart for the 7B70.

voltage or waveform in the circuit. Typical voltages and waveforms are given on the diagrams.

CAUTION

Do not clamp probe to pin connectors as this may break or damage the connectors.

NOTE

Voltages and waveforms given on the diagrams are not absolute and may vary slightly between instruments. To obtain operating conditions similar to those used to take these readings, see the first diagram page.

7. Check Individual Components. The following procedures describe methods of checking individual components in the 7B70. Components which are soldered in place are best checked by disconnecting one end. This isolates the measurement from the effects of surrounding circuitry.

A. RELAYS. The 7B70 uses two types of relays. The eight pin DPDT relay is symmetrical and may be replaced in its socket facing either direction. The five pin SPDT relay will mate with its socket in one direction only. These relays, which are plugged into the circuit board, may be removed and checked. Using an ohmmeter, check for a DC resistance of 600 ohms across the coil. Each relay can be actuated by applying 15 volts across the coil. With the relay actuated, check the normally open contacts for continuity. When returning the relays to the circuit board, place the five pin relay in the five pin socket and the eight pin relays in the eight pin sockets.

B. TRANSISTORS. The best check of transistor operation is actual performance under operating conditions. If a transistor is suspected of being defective, it can best be checked by substituting a new component or one which has been checked previously. However, be sure that circuit conditions are not such that a replacement transistor might also be damaged. If substitute transistors are not available, use a dynamic tester (such as Tektronix Type 576).

C. DIODES. A diode can be checked for an open or shorted condition by measuring the resistance between terminals. With an ohmmeter scale having an internal source of between 800 millivolts and 3 volts, the resistance should be very high in one direction and very low when the leads are reversed.

CAUTION

Do not use an ohmmeter scale that has a high internal current. High currents may damage the diode.

D. RESISTORS. Resistors can be checked with an ohmmeter. Check the Electrical Parts List for the tolerance of the resistors used in this instrument.

E. INDUCTORS. Check for open inductors by checking continuity with an ohmmeter. Shorted or partially shorted inductors can usually be found by checking the waveform response when high-frequency signals are passed through the circuit. Partial shorting often reduces high-frequency response.

F. CAPACITORS. A leaky or shorted capacitor can best be detected by checking the resistance with an ohmmeter on the highest scale. Do not exceed the voltage rating of the capacitor. The resistance reading should be high after initial charge of the capacitor. An open capacitor can best be detected with a capacitance meter or by checking whether the capacitor passes AC signals.

8. Repair and Readjust the Circuit. If any defective parts are located, follow the replacement procedures given in this section. Be sure to check the performance of any circuit that has been repaired or that has had any electrical components replaced.

CORRECTIVE MAINTENANCE

General

Corrective maintenance consists of component replacement and instrument repair. Special techniques required to replace components in this instrument are given here.

Obtaining Replacement Parts

Standard Parts. All electrical and mechanical part replacements for the 7B70 can be obtained through your local Tektronix Field Office or representative. However, many of the standard electronic components can be obtained locally in less time than is required to order them from Tektronix, Inc. Before purchasing or ordering replacement parts, check the parts list for value, tolerance, rating and description.

NOTE

When selecting replacement parts, it is important to remember that the physical size and shape of a component may affect the performance in the instrument, particularly at high frequencies. All replacement parts should be direct replacements unless it is known that a different component will not adversely affect instrument performance.

Special Parts. In addition to the standard electronic components, some special parts are used in the 7B70. These

parts are manufactured or selected by Tektronix, Inc. to meet specific performance requirements, or are manufactured for Tektronix, Inc. in accordance with our specifications. These special parts are indicated in the parts list by an asterisk preceding the part number. Most of the mechanical parts used in this instrument have been manufactured by Tektronix, Inc. Order all special parts directly from your local Tektronix Field Office or representative.

Ordering Parts. When ordering replacement parts from Tektronix, Inc., include the following information:

1. Instrument Type.
2. Instrument Serial Number.
3. A description of the part (if electrical, include circuit number).
4. Tektronix Part Number.

Soldering Techniques

WARNING

Disconnect the instrument from the power source before soldering.

Circuit Boards. The components mounted on the circuit boards in the amplifier can be replaced using normal circuit board soldering techniques. Keep the following points in mind when soldering on the circuit boards.

1. Use a pencil-type soldering iron with a power rating from 15 to 50 watts.
2. Apply heat from the soldering iron to the junction between the component and the circuit board.
3. Heat-shunt the lead of the component by means of a pair of long-nosed pliers.
4. Avoid excessive heating of the junction with the circuit board, as this could separate the circuit board wiring from the laminate.
5. Use electronic grade 60-40 tin-lead solder.
6. Clip off any excess lead length extending beyond the circuit board and clean off any residual flux with a flux-removing solvent. Be careful that the solvent does not remove any printing from the circuit board.

Metal Terminals. When soldering metal terminals (e.g., switch terminals, potentiometers, etc.), use 60-40 tin-lead solder and a 15 to 50 watt soldering iron. Observe the following precautions when soldering metal terminals:

1. Apply only enough heat to make the solder flow freely.
2. Apply only enough solder to form a solid connection. Excess solder may impair the function of the part.
3. If a wire extends beyond the solder joint, clip off the excess.
4. Clean the flux from the solder joint with a flux-removing solvent.

Component Replacement

WARNING

Disconnect the equipment from the power source before replacing components.

Relay Replacement. The relays in the 7B70 are manufactured by Tektronix Inc. If a relay fails, a replacement may be ordered from your local Tektronix Field Office or representative. The five pin relay sockets on the circuit board will accept only the five pin SPDT relay. It is possible, however, to place a five pin SPDT relay in an eight pin socket intended for use with one of the eight pin relays. This would not damage the instrument or the relay, but would cause a malfunction of the instrument. The eight pin DPDT relays may be placed in their sockets facing either direction, as these relays are symmetrical.

CAUTION

The relays used in this instrument can be damaged by heat. Do not apply a soldering iron to the relay socket until the relay has been removed from the socket.

Transistor Replacement. Transistors should not be replaced unless actually defective. If removed from their sockets during routine maintenance, return them to their original sockets. Unnecessary replacement of transistors may effect the calibration of this instrument. When transistors are replaced, check the operation of that part of the instrument which may be affected.

Replacement transistors should be of the original type or a direct replacement. Remount the transistors in the same manner as the original. Fig. 4-3 shows the lead configurations of the transistors used in this instrument. This view is

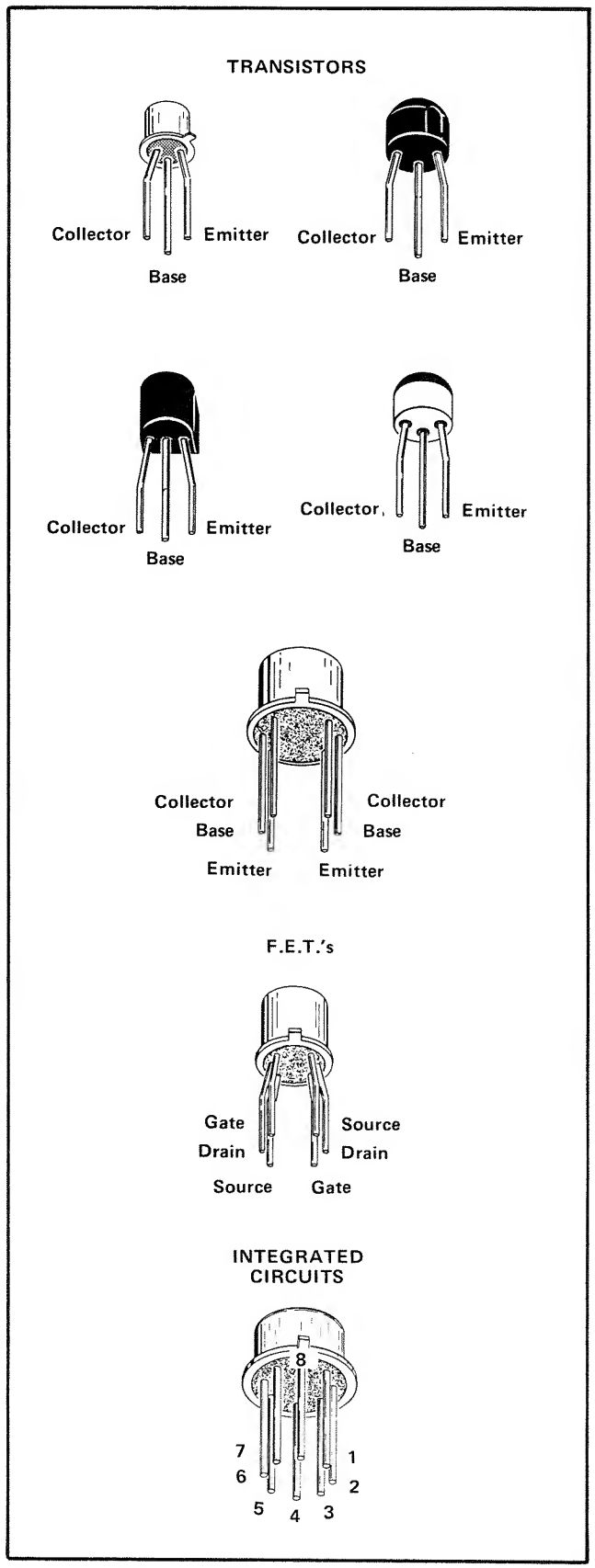

Fig. 4-3. Electrode configuration of transistors and integrated circuits used in this instrument.

as seen from the bottom of the transistor. When replacing transistors, check the manufacturer's basing diagram for correct basing.

Interconnecting Pins and Pin Socket Replacement. Two types of mating connectors are used for these interconnecting pins. If the mating connector is mounted on a plug-on circuit board, a special socket is soldered into the board. If the mating connector is on the end of a lead, a pin connector is used to mate with the interconnecting pin. The following information provides the replacement procedure for the various types of pins and pin sockets.

CAUTION

When removing the stub of a broken pin connector, it is important not to disturb the old ferrule which is swaged into the circuit board. Use the minimum amount of heat necessary to remove the pin. The new pins are supplied with ferrules intact. Remove the ferrule from the new pin before inserting the pin into the old ferrule in the circuit board. The old ferrule may be reamed out with a .031 drill if necessary. A circuit board pin replacement kit including necessary tools, instructions and replacement pins is available from Tektronix, Inc. Order Tektronix Part No. 040-0542-00.

A. CIRCUIT BOARD PINS. To replace a pin which is mounted on a circuit board, first disconnect any pin connectors. Unsolder the damaged pin and pull it out of the circuit board. Press the new pin into the ferrule in the circuit board. (Notice that the ferrule is not centered on the pin; be sure the replacement pin is positioned in the same manner as the original.) Solder the pin on both sides of the circuit board. If the pin was bent at an angle to mate with a connector, bend the new pin to match the associated pins. The inside radius of this bend should not be less than 0.025 inch.

B. CIRCUIT BOARD PIN SOCKETS. The pin sockets on the circuit boards are soldered to the rear of the board. To replace the sockets, first unsolder the socket (use a vacuum-type desoldering tool to remove excess solder). Straighten the tabs on the socket to remove it from the hole in the circuit board. Place the new socket in the circuit board hole and press the tabs down against the board. Solder the socket tabs to the circuit board.

NOTE

The spring tension of the terminal sockets ensures a good connection between the circuit board and the pin. This spring tension can be destroyed by using the pin sockets as a connecting point for spring-loaded probe tips, alligator clips, etc.

C. END-LEAD PIN CONNECTORS. The pin connectors used to connect the wires to the circuit board pins are

clamped to the ends of the associated leads. To replace a damaged pin connector, first remove the old pin connector from the end of the lead. Clamp the new pin connector to the end of the lead. Some of the pin connectors are grouped together and mounted in a plastic holder. These connectors are removed and re-installed as a unit. To provide correct orientation of this multi-connector when it is replaced, an arrow is stamped on the circuit board and a matching arrow is moulded into the plastic housing of the multi-pin connector.

Switch Replacement. Two types of switches are used in the 7B70. The pushbutton switches and the cam-type switch should be replaced as a unit if damaged. The following special maintenance information is provided for the cam-type and pushbutton type switches.

CAUTION

Repair of the cam switch should only be undertaken by skilled maintenance personnel. Switch alignment and contact spacing must be carefully maintained for proper operation of the switch. A cam-type switch repair kit including the necessary tools, instructions and replacement contacts is available from Tektronix, Inc. Order Tektronix Part No. 040-0541-00.

A. CAM-TYPE SWITCH. The cam-type switch (TIME/DIV) consists of a rotating cam, which is turned by the front panel knob, and a set of contacts mounted on an adjacent circuit board. These switch contacts are actuated by lobes on the cam. The TIME/DIV switch can be disassembled for inspection, cleaning, repair or replacement as follows:

1. Remove the four screws which hold the metal cover over the switch. The switch is now open for inspection or cleaning.

2. To completely remove the switch, loosen the set screw on the collar securing the VARIABLE shaft to the VARIABLE potentiometer and pull the shaft completely out the front of the unit. Loosen the two set screws on the TIME/DIV knob and remove the knob. Remove the plastic bushing from the access hole for the TIME/DIV shaft.

3. Remove the sweep generator board by loosening the securing screws and carefully lifting out.

4. Remove the six screws which hold the cam switch to the interface circuit board and remove the cam switch.

5. To remove the cam from the front support block, remove the retaining ring from the shaft on the front of the switch and slide the cam out of the support block. Do not lose the small detent roller.

6. To replace defective switch contacts, unsolder the damaged contact and clean the solder from the hole in the circuit board. Following the procedure given in the instruction sheet included with the cam switch replacement kit, use the alignment tool to position the new contact in place. Solder the contact using the soldering techniques given previously in this section of the manual.

7. To re-assemble the switch, reverse the above procedure.

B. PUSH-BUTTON SWITCHES. Use the following procedure to replace the five pushbutton switches:

1. Loosen the set screws and remove the POSITION, LEVEL/SLOPE, TIME/DIV, VARIABLE, and Amplifier VARIABLE knobs.

2. Remove the front panel to gain access to the switch mounting screws.

3. To remove the DISPLAY MODE switch, remove the phillips head screw and disconnect the multi-pin connector.

4. To remove the MAGNIFIER switch, remove the phillips head screw and disconnect the multi-pin connector.

5. To remove the TRIGGERING switches, remove the two phillips head screws from each of the MODE, COUPLING and SOURCE switches. Disconnect the following multi-pin connectors: AMPLIFIER VARIABLE, DISPLAY MODE, SWP CAL, POSITION, LEVEL/SLOPE, TRIG'D and MAGNIFIER. Disconnect the two pin connectors from the SOURCE and COUPLING switches. Remove the four screws securing the front of the unit to the top and bottom and remove the front of the unit. Remove the TRIGGERING switches (the sweep generator board may have to be removed to take out the TRIGGERING MODE switch).

Light Bulb Replacement. To replace the light bulbs follow the above procedure to remove the switches. Remove the screw and cover from the back of the switch to expose the light bulb. Unsolder the two leads and remove the light bulb. Cut the leads of the replacement light bulb to the same length as those of the old bulb. Place insulating sleeves over the leads and replace the new bulb in the exact position of the old bulb.

Reassemble by reversing the above procedure.

Instrument Repackaging

If the 7B70 is to be shipped for long distances by commercial means of transportation, it is recommended that the instrument is repackaged in the original manner for maximum protection. The original shipping carton can be saved and used for this purpose or new shipping cartons can be obtained from Tektronix, Inc. through your local Tektronix Field Office or representative. Repackaging information can be found in the Mechanical Parts Illustrations at the rear of this manual.

NOTE

The plug-ins should not be shipped installed in an oscilloscope. The oscilloscope packaging material is not designed to protect the plug-ins.

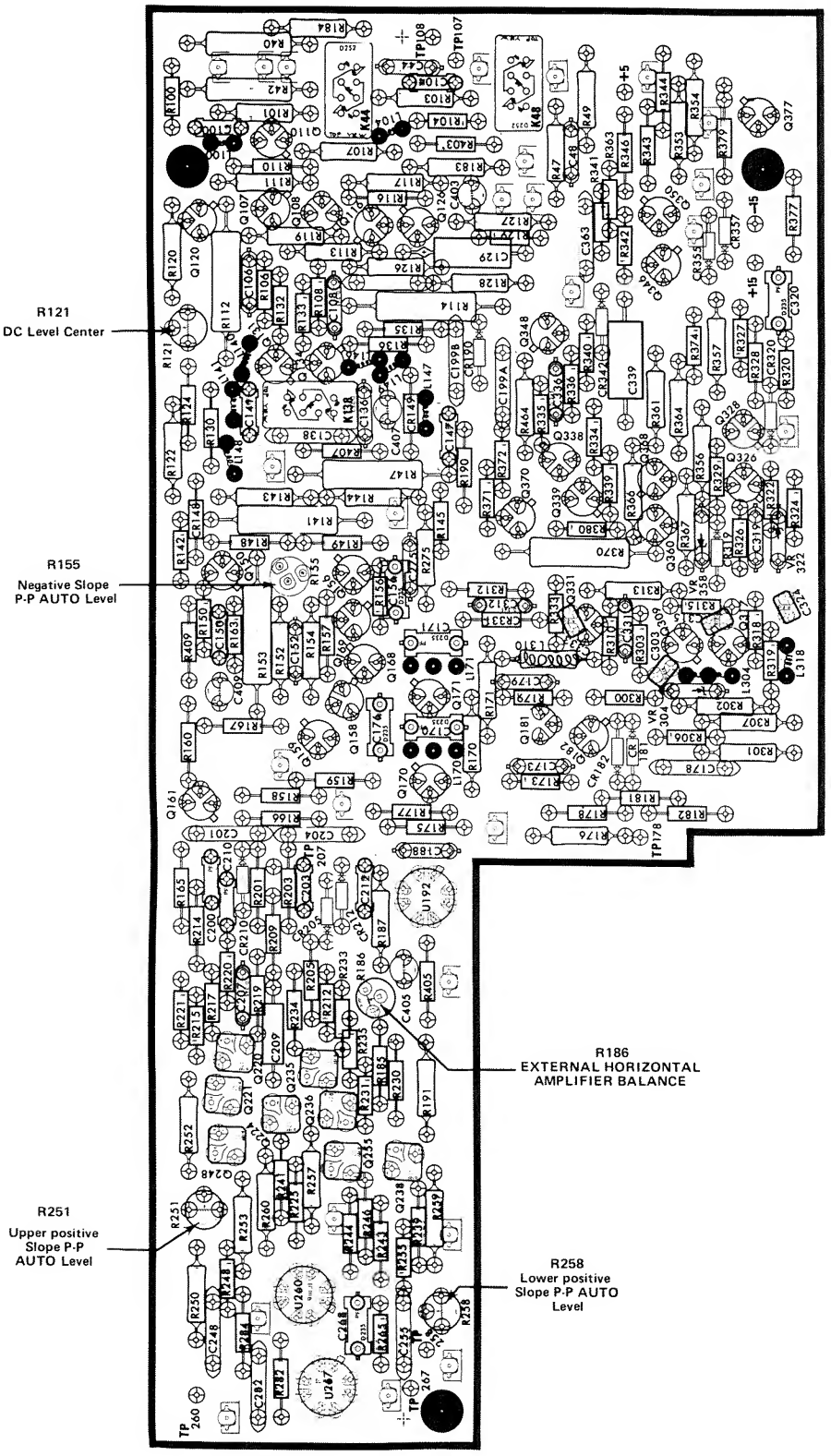

Fig. 4-4. Trigger Generator board (front view) showing location of components and adjustments.

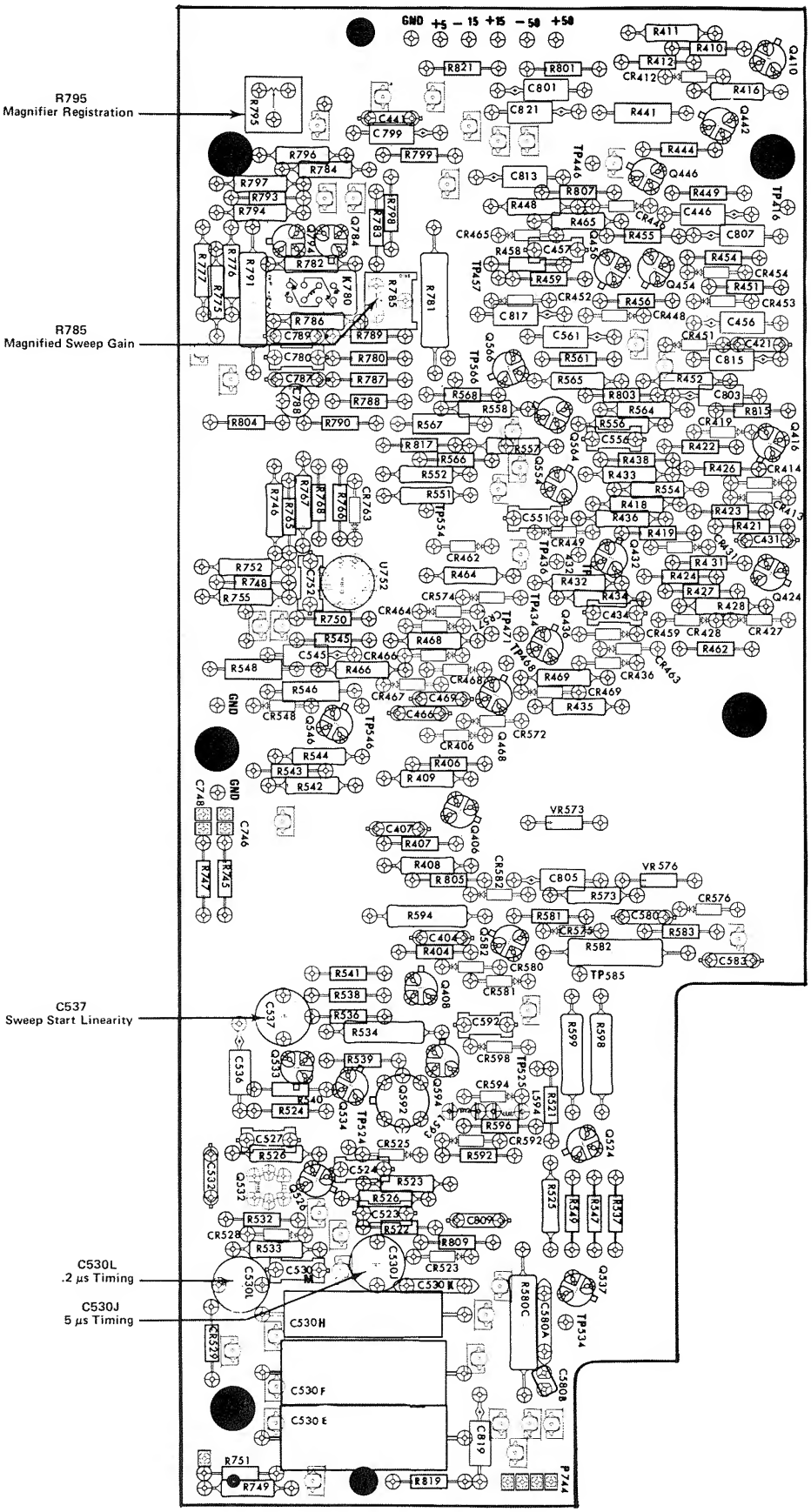

Fig. 4-5. Time Base board (front view) showing location of components and adjustments.

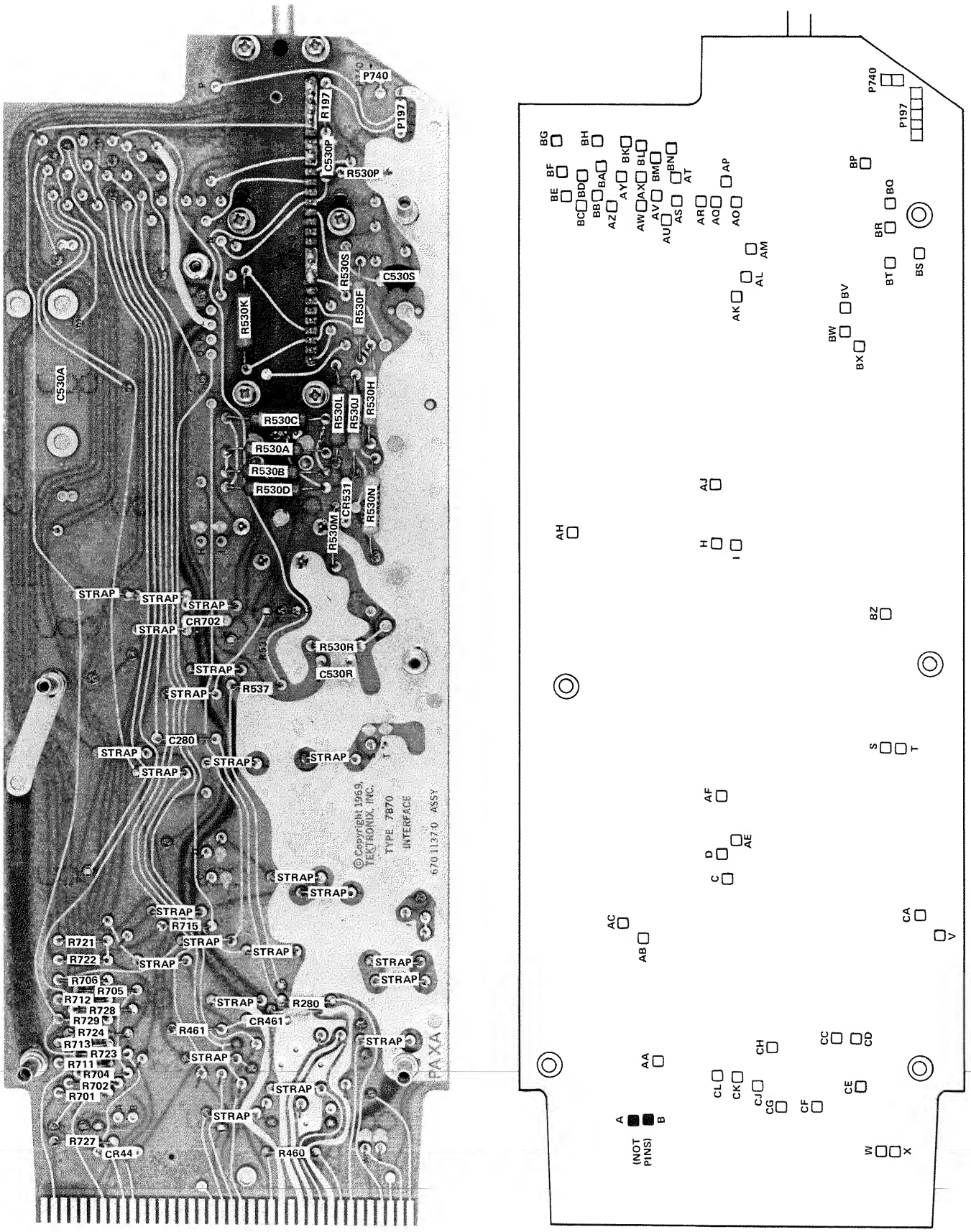

Fig. 4-6. Interface board (left side) showing location of components and connections.

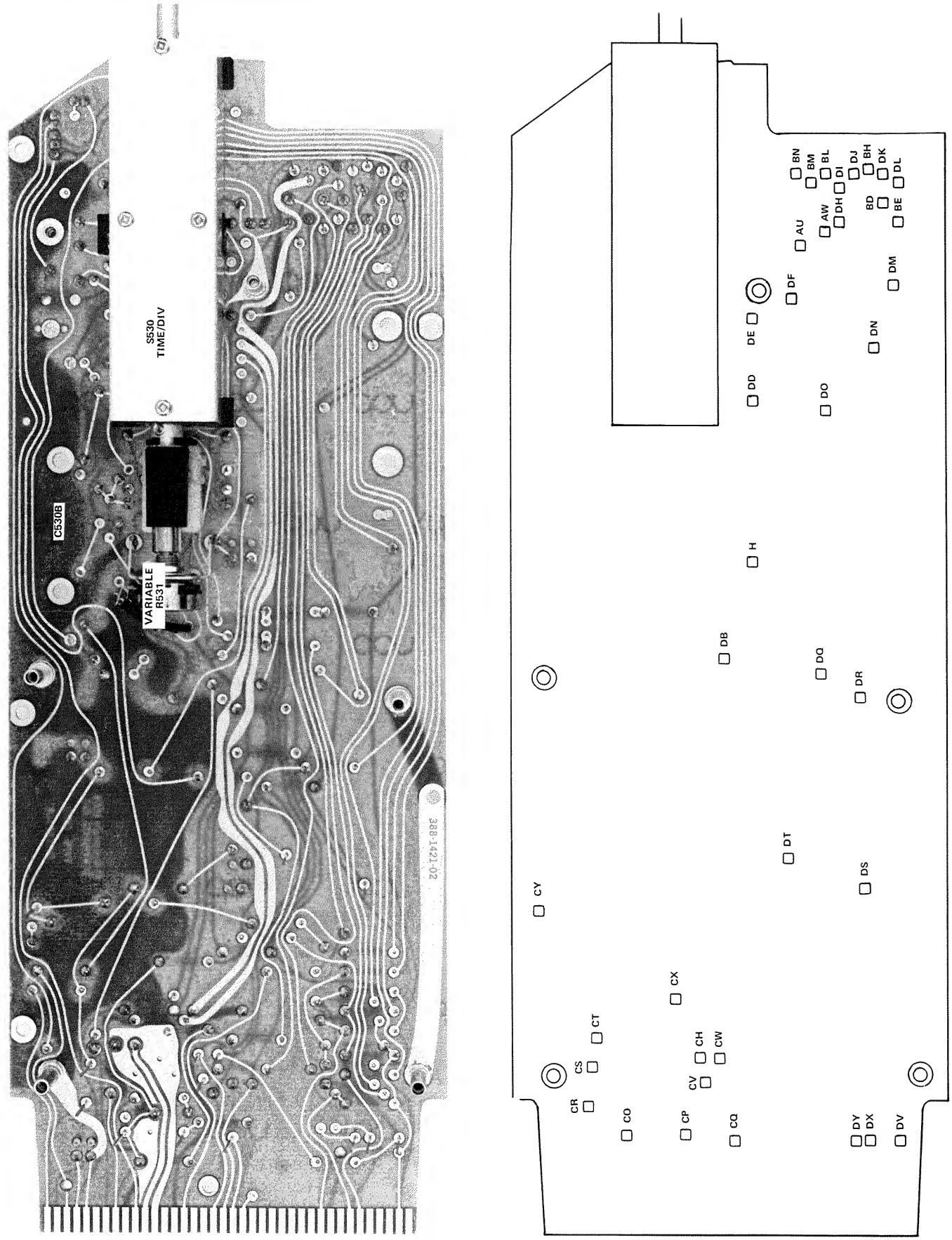

Fig. 4-7. Interface board (right side) showing location of components and connectors.

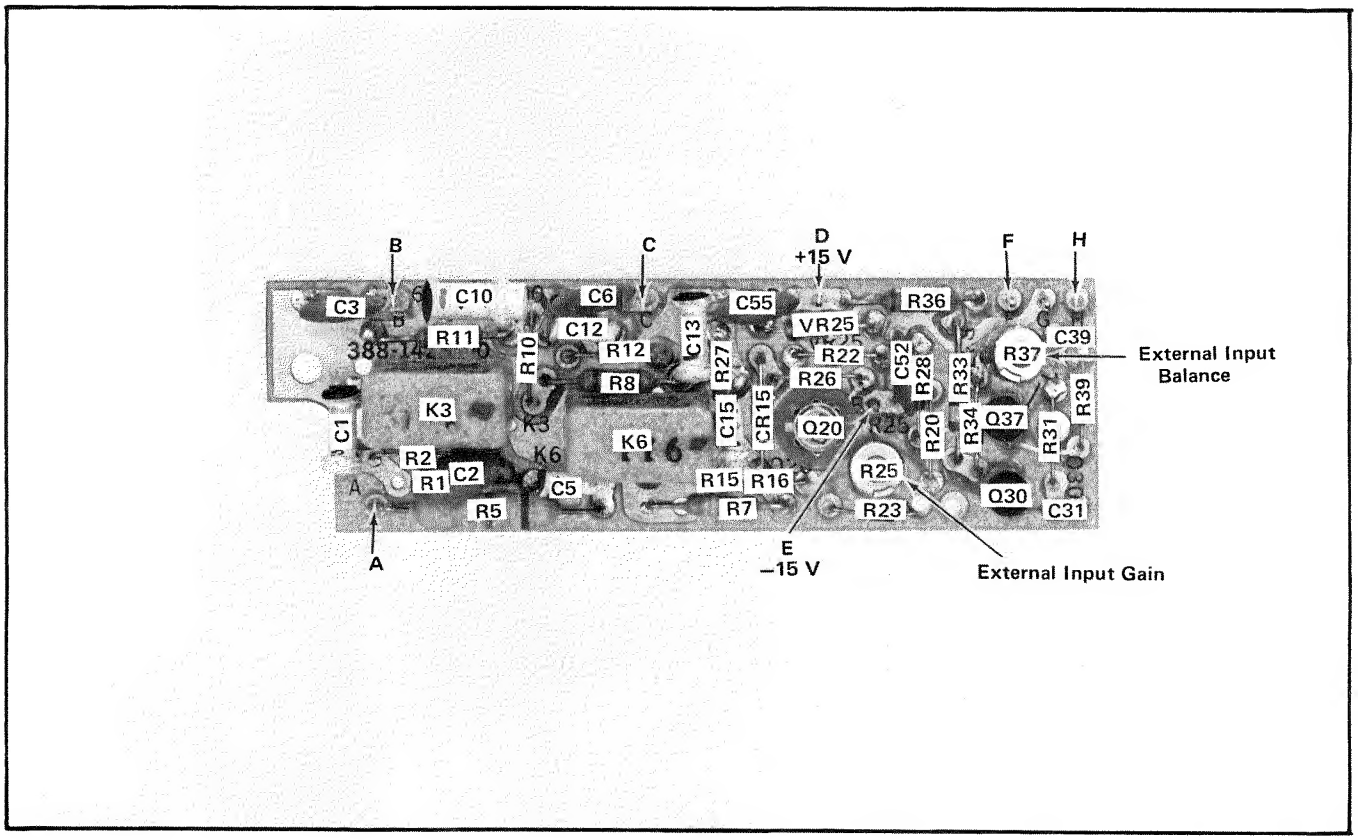

Fig. 4-8. External board showing location of components and connectors.

SECTION 5
PERFORMANCE CHECK / CALIBRATION

Change information, if any, affecting this section will be found at the rear of the manual.

Introduction

To assure instrument accuracy, check the calibration of the 7B70 every 1000 hours or every six months if used infrequently. Before calibration, thoroughly clean and inspect this instrument as outlined in the Maintenance Section.

The complete Performance Check/Calibration Procedure can be used to check instrument performance without removing side covers or making internal adjustments by performing all portions except the ADJUST part of the steps. Screwdriver adjustments which are accessible without removing the covers are adjusted as part of the performance check procedure. A note titled PERFORMANCE CHECK ONLY gives instructions which are applicable only to the performance check procedure.

Completion of each step in the complete Performance Check/Calibration Procedure insures that this instrument meets the electrical specifications given in Section 1. For best overall instrument performance, when performing a complete calibration procedure, make each adjustment to the exact setting even if the CHECK is within the allowable tolerance.

A Short-Form Procedure is given prior to the complete procedure. To facilitate instrument calibration, for the experienced calibrator, the Short-Form Procedure lists the calibration adjustment necessary for each step and the applicable tolerances. This procedure also includes the step number and title as listed in the complete Performance Check/Calibration Procedure and the page number on which each step begins. Therefore, the Short-Form Procedure can be used as an index to locate a step in the complete procedure. Another feature of the Short-Form Procedure is the spaces provided to record performance data or to check off steps as they are completed. This procedure may be reproduced and used as a permanent record of instrument calibration.

NOTE

All waveforms shown in this procedure were taken with a Tektronix Oscilloscope Camera System. Limits, tolerances and waveforms in this procedure are given as calibration guides and should not be interpreted as instrument specifications except as stated in Section 1.

A partial calibration is often desirable after replacing a component or to touch up an adjustment of a portion of the instrument between major recalibrations. For partial calibration, set the controls as given under Preliminary Control Settings and start with the desired check or checks. If any controls need to be changed from the preliminary settings for this portion of the calibration procedure, they are listed under the heading Partial Procedure. To prevent unnecessary recalibration of other parts of the instrument, readjust only if the tolerance given in the CHECK part of the step is not met. If readjustment is necessary, also check the calibration of any steps listed in the INTERACTION part of the step.

TEST EQUIPMENT REQUIRED

General

The following test equipment and accessories, or its equivalent, are required for complete calibration of the 7B70. Specifications given are the minimum necessary for accurate calibration. Therefore, some of the recommended equipment may have specifications which exceed those given. All test equipment is assumed to be correctly calibrated and operating within the given specifications. If equipment is substituted, it must meet or exceed the specifications of the recommended equipment.

Special Tektronix calibration fixtures are used in this procedure only where they facilitate calibration. These special calibration fixtures are available from Tektronix, Inc. Order by part number through your local Tektronix Field Office or representative.

1. Test time-base compatible with the Tektronix 7700-series oscilloscope. 7B71 used in these checks.

2. Vertical amplifier (2 each) for use with Tektronix 7000-series oscilloscopes. Bandwidth, 200 MHz or greater; deflection factor, 5 volts to less than 50 millivolts. Tektronix 7A16A used in these checks (a single 7A12 may be used instead of the two 7A16A amplifiers).

3. Oscilloscope. Tektronix 7700 or 7900-series. 7704 used in these checks except step 24 (7904).

4. Plug-in extender (Rigid). Tektronix Part Number 067-0589-00.

5. Low-frequency sine-wave generator. Frequency range, 20 hertz to greater than 50 kilohertz; output amplitude, 150 millivolts to 5 volts. For example, General Radio Model 1310-A Oscillator.

6. Constant amplitude sine-wave generator. Reference frequency, 50 kilohertz; frequency range, 10 megahertz to 100 megahertz; output amplitude variable from 150 millivolts to 5 volts. Tektronix Type 191 recommended.

7. Time-mark generator. Marker outputs, five seconds to five nanoseconds; marker accuracy, within 0.1%. Tektronix 2901 Time-Mark Generator recommended.

8. Calibration Fixture, Constant Amplitude Signal Generator. Reference frequency, 3 megahertz; frequency range, 65 megahertz to above 200 megahertz; output amplitude, 0.5 to 5 volts peak to peak into 50 ohms; amplitude accuracy, output amplitude constant within 1% or 3 megahertz reference as output frequency changes. Tektronix Part Number 067-0532-01.

9. Standard Amplitude Calibrator. Frequency, 1 kHz; output amplitude, 0.5 mV to 50 V peak to peak in a 1-2-5 step sequence; amplitude accuracy, ±0.25%. Tektronix calibration fixture 067-0502-00 recommended.

10. 10X probe. Tektronix Type P6053A recommended.

11. Cable (2 each). Connectors, BNC; Impedance, 50 ohms; length, 42 inches. Tektronix Part Number 012-0057-01.

12. BNC T connector. Tektronix Part Number 103-0030-00.

13. 50 ohm feedthrough termination (2 each). Tektronix Part Number 011-0049-01.

14. Adapter. GR to BNC female. Tektronix Part Number 017-0063-00.

15. 1X Probe (2 each). Tektronix P6011 probe recommended.

Optional Equipment

1. Plug-In Extension (Flexible), Tektronix Part Number 067-0616-00 (when used with vertical plug-in, allows easier access to adjustments on left side of 7B70).

SHORT-FORM PROCEDURE

7B70 _____

Calibration Date _____

Calibrated By _____

1. Adjust Upper Positive Slope P-P AUTO Level (R251) Page 5-5

Requirement: Stable triggering on a 0.5 division 50 kHz signal with the LEVEL/SLOPE control set to 11:30.

Performance: Correct ____ ; Incorrect ____ .

2. Adjust Lower Positive Slope P-P AUTO Level (R258) Page 5-5

Requirement: Stable triggering on a 0.5 division 50 kHz signal with the LEVEL/SLOPE control set to 6:30.

Performance: Correct ____ ; Incorrect ____ .

3. Adjust Negative Slope P-P AUTO Level (R155) Page 5-5

Requirement: Stable triggering on a 0.5 division 50 kHz signal with the LEVEL/SLOPE control set to the negative slope.

Performance: Correct ____ ; Incorrect ____ .

4. Check AUTO Triggering Sensitivity Page 5-5

Requirement: Stable triggering on a 0.3 division 50 kHz signal with the LEVEL/SLOPE control set near 9:00 and 3:00.

Performance: Correct ____ ; Incorrect ____ .

5. Check Normal Triggering Sensitivity Page 5-5

Requirements: Stable triggering on a 0.3 division 50 kHz signal with the LEVEL/SLOPE control set near 9:00 and 3:00.

Performance: Correct ____ ; Incorrect ____ .

6. Adjust DC Level Center (R121) Page 5-6

Requirement: Stable triggering on a 0.3 division 50 kHz signal with LEVEL/SLOPE near 9:00 and COUPLING set to DC.

Performance: Correct ____ ; Incorrect ____ .

7. Check Single Sweep Mode Page 5-6

Requirement: After each sweep, further displays are locked out until the RESET button is pressed.

Performance: Correct ____ ; Incorrect ____ .

8. Adjust External Horizontal Amplifier Balance (R186) Page 5-6

Requirement: With all SOURCE buttons cancelled, adjust for minimum movement of dot as VARIABLE is rotated.
Performance: Correct ____; Incorrect ____.

9. Adjust External Input Balance (R37) Page 5-6

Requirement: Adjusted for no movement of dot as VARIABLE control is rotated.

Performance: Correct ____; Incorrect ____.

10. Adjust External Input Gain (R25) Page 5-6

Requirement: With a one volt signal applied to the EXT TRIG IN connector, the push-pull output of the External Input Amplifier is 0.2 volt.

Performance: Correct ____; Incorrect ____.

11. Check Horizontal Amplifier Gain Page 5-6

Requirement: Display is 4 divisions ± 0.8 division with a 100 millivolt signal applied to the EXT VOLTS IN connector.

Performance: Correct ____; Incorrect ____.

12. Check Trigger Bandwidth Page 5-7

Requirement: Trigger Bandwidth meets the specifications given in Section 1. Refer to complete procedure.

Performance: Correct ____; Incorrect ____
list discrepancies _____.

13. Check Sweep Jitter Page 5-8

Requirement: No more than one nanosecond of jitter with a 150 MHz signal applied.

Performance: Correct ____; Incorrect ____.

14. Check Horizontal Amplifier Bandwidth Page 5-8

Requirement: No more than −3 dB at 16 hertz and 100 kilohertz.

Performance: Correct ____; Incorrect ____.

15. Check Amplifier VARIABLE Range Page 5-8

Requirement: With VARIABLE fully clockwise, apply an eight division signal. Turn VARIABLE fully counterclockwise, check for 0.8 division or less display.

Performance: Correct ____; Incorrect ____.

16. Check Line Trigger Source Page 5-9

Requirement: Stable triggering of the proper polarity on the positive and negative slope of the LEVEL/SLOPE control.

Performance: Correct ____; Incorrect ____.

17. Check/Adjust Sweep Calibration (SWP CAL, a front-panel adjust) Page 5-9

Requirement: With 1 ms markers applied and TIME/DIV set to 1 ms, check for one marker each division. The second and tenth markers must line up with their respective graticule lines.

Performance: Correct ____; Incorrect ____.

18. Check/Adjust Magnified Sweep Gain (R785) Page 5-10

Requirement: With TIME/DIV at 1 ms, MAGNIFIER at X10 and .1 ms markers applied, check for one marker each division.

Performance: Correct ____; Incorrect ____.

19. Check/Adjust Magnifier Registration (R795) Page 5-10

Requirement: 0.2 division or less trace shift when switching MAGNIFIER from X10 to X1.

Peformance: Correct ____; Incorrect ____.

20. Check Sweep Length Page 5-10

Requirement: Sweep length must be between 10.5 and 13 divisions.

Peformance: Correct ____; Incorrect ____.

21. Check Variable Time/Div Page 5-11

Requirement: Continuously variable between calibrated settings of the TIME/DIV switch.

Performance: Correct ____; Incorrect ____.

22. Check/Adjust 5 μs Timing (C530J) Page 5-11

Requirement: With 5 μs markers applied and TIME/DIV set to 5 μs, check for one marker each division. The second and tenth markers must line up with their respective graticule lines.

Performance: Correct ____ ; Incorrect ____ .

23. Check/Adjust .2 μs Timing (C530L) Page 5-12

Requirement: With .1 μs markers applied and TIME/DIV set to .2 μs, check for two markers each division.

Performance: Correct ____ ; Incorrect ____ .

24. Adjust Sweep Start Linearity (C537) Page 5-12

Factory Adjustment, see Note on Page 5-12.

25. Check Sweep Timing Accuracy Page 5-13

Requirement: Accuracy over the center eight divisions is within 3% from 5 seconds/division to 1 second/division; 2% from 0.5 second/division to 0.02 microsecond/division.

Performance: Correct ____ ; Incorrect ____
list discrepancies ____ .

26. Check Magnified Sweep Timing Page 5-13

Requirement: Magnified timing accuracy over the center eight division is within 3.5% from 5 seconds/division to 1 second/division; 2.5% from .5 second/division to 0.02 microsecond/division.

Performance: Correct ____ ; Incorrect ____ .

27. Check Sweep Holdoff Time Page 5-14

Requirement: Holdoff time is 1.5 times the TIME/DIV setting or less for 5 s/Div to 5 μs/Div; 3.5 μs or less for 2 μs/Div to 0.02 μs/Div.

Performance: Correct ____ ; Incorrect ____ .

PERFORMANCE CHECK/CALIBRATION PROCEDURE

The following procedure is arranged so the 7B70 can be calibrated with the least interaction of adjustments and reconnection of equipment. The control settings continue from the preceding step(s) unless noted otherwise.

The following procedure uses the equipment listed under Test Equipment Required. If other equipment is substituted, control settings or calibration setup may need to be altered to meet the requirements of the equipment used. Detailed operating instructions for the test equipment are not given in this procedure. Refer to the instruction manual for the test equipment if more information is required.

NOTE

This instrument should be calibrated at an ambient temperature of +25°C ±10°C for best overall accuracy. If the temperature is outside the given range, see Section 1 for the applicable tolerances.

Preliminary Control Settings

7B70 (B Horizontal Plug-In Compartment)

LEVEL/SLOPE	Centered on Positive Slope (9:00 o'clock)
TRIGGERING	
MODE	P-P AUTO
COUPLING	AC
SOURCE	INT
POSITION	Midrange
MAGNIFIER	X1
DISPLAY MODE	TIME BASE
TIME/DIV	20 μs
VARIABLE TIME/DIV	CAL IN
AMPLIFIER VARIABLE	Fully Clockwise

7A16A (Left Vertical Plug-In Compartment)

Position	Midrange
Polarity	+ UP
Bandwidth	Full
Volts/Div	.5 V
Coupling	AC

7B71 (Test Time Base)
(Used only in step 27)

Oscilloscope

A Intensity	CCW
B Intensity	CCW (see following paragraph)
Vertical Mode	Left
Horizontal Mode	B
A Trigger Source	Vert Mode
B Trigger Source	Vert Mode

Turn the Oscilloscope power on and advance the B Intensity until a free-running trace is observed. Center the trace with the horizontal and vertical Position controls. Allow several minutes warmup before proceeding with calibration.

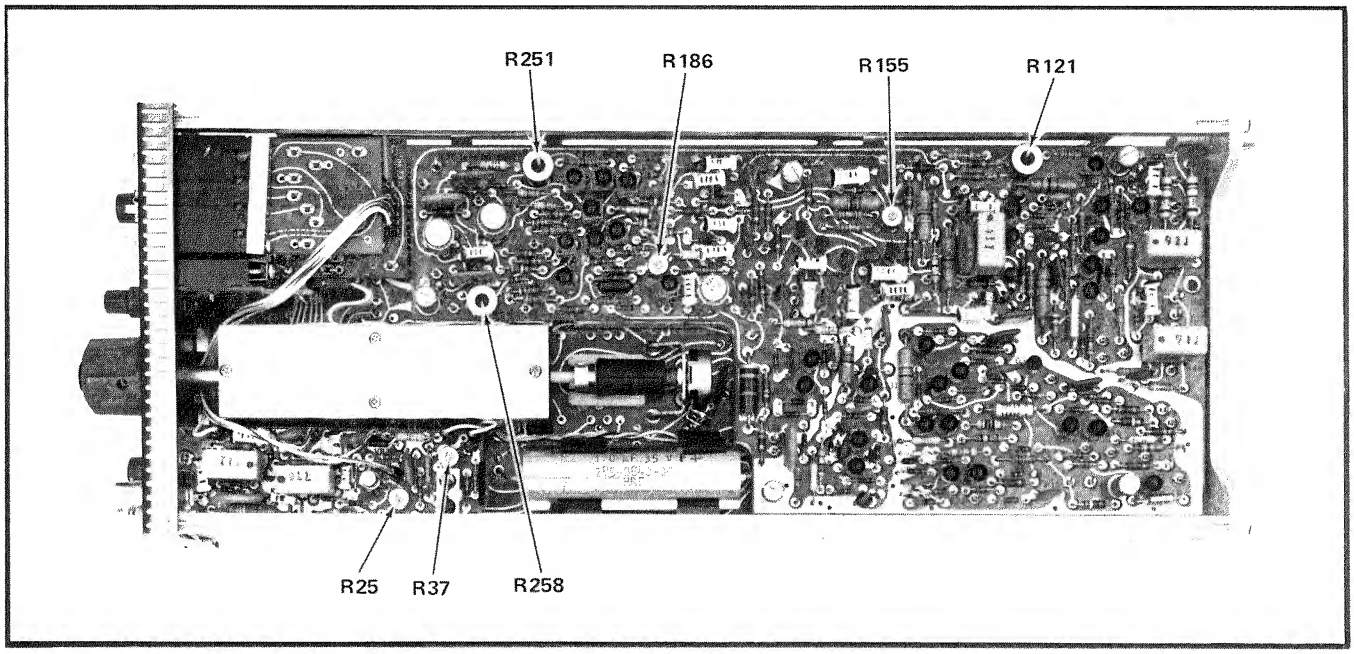

Fig. 5-1. Location of adjustments on Trigger Board.

1. Adjust Upper Positive Slope P-P AUTO Level (R251)

a. Install the 7B70 through the rigid extender in the B Horizontal Plug-In Compartment.

b. Apply 0.5 division of 50 kHz sine wave from the Type 191 sine-wave generator to the 7A16A Input connector. Set the LEVEL/SLOPE control to 11:30 (near the top on the positive slope).

c. ADJUST—R251 for a stable display. See Fig. 5-1 for location of adjustment.

2. Adjust Lower Positive Slope P-P AUTO Level (R258)

a. Reset the LEVEL/SLOPE control to 6:30 (near the bottom on the positive slope).

b. ADJUST—R258 for a stable display. Refer to Fig. 5-1 for location of adjustment.

3. Adjust Negative Slope P-P AUTO Level (R155)

a. Reset the LEVEL/SLOPE control to 3:00 (centered on the negative slope).

b. ADJUST—R155 for a stable display. Refer to Fig. 5-1 for location of adjustment. Check for stable triggering over the full 360° range of the LEVEL/SLOPE control.

4. Check AUTO Triggering Sensitivity

a. Set the TRIGGERING MODE to AUTO. Adjust the Type 191 amplitude for a 0.3 division CRT display.

b. CHECK—For stable triggering with the LEVEL/SLOPE control near 3:00 and near 9:00. Check for a free-running sweep at all other positions.

5. Check NORMAL Triggering Sensitivity

a. Set the TRIGGERING MODE to NORM.

b. CHECK—For stable triggering near 9:00 and near 3:00.

NOTE

The 7A16A Position control must be set for zero volts DC between interface pins A20 and B20 of the 7B70 (center conductor of top female BNC jacks on the right and left side of the rigid extender) before performing step 6.

6. Adjust DC Level Center (R121)

a. Set the LEVEL/SLOPE control near 9:00 and adjust for a stable display.

b. ADJUST—Change the TRIGGERING COUPLING to DC and adjust R121 for a stable display. Return the TRIGGERING COUPLING to AC.

7. Check SINGLE SWEEP MODE

a. Adjust the LEVEL/SLOPE control for a stable display and change the TRIGGERING MODE to SINGLE SWEEP.

b. CHECK—Remove the signal from the 7A16A. Press the RESET button and check that the READY light is lit. Reconnect the signal to the 7A16A and check that the sweep runs one time. (Increase the B Intensity as necessary to view the trace.) At the end of the sweep, the ready light should go out. Reduce the B Intensity to its level before step 7.

c. Disconnect the signal from the Type 191.

8. Adjust External Horizontal Amplifier Balance (R186)

a. Set the COUPLING to DC and the DISPLAY MODE to AMPLIFIER. Set the SOURCE switch so that all buttons are out (this may be accomplished by pressing lightly on one of the buttons until all the buttons are cancelled).

b. ADJUST—R186 to bring the dot on to the display area. While rotating the AMPLIFIER VARIABLE control, adjust R186 for minimum movement of the dot as the VARIABLE control is rotated throughout its range.

9. Adjust External Input Amplifier Balance (R37)

a. Set the SOURCE to EXT.

b. ADJUST—While rotating the AMPLIFIER VARIABLE control throughout its range, adjust R37 for minimum movement of the dot.

10. Adjust External Input Gain (R25)

NOTE

Step 10 requires two 7A16A amplifiers or a dual trace amplifier such as the 7A12.

a. Set the TRIGGERING MODE to P-P AUTO, DISPLAY MODE to TIME BASE and apply a one volt signal from the standard amplitude calibrator to the EXT TRIG IN connector. Set the 7B70 TIME/DIV to .2 ms.

b. Set the Oscilloscope Vertical Mode to Add. Set both 7A16A Volts/Div to 50 millivolts. Set the Polarity switch of the 7A16A in the right vertical compartment to Invert. Connect a 1X probe from the left vertical plug-in to pin F on the External Input board and a 1X probe from the right vertical plug-in to pin H on the External Input board. See Fig. 5-2 for location of pins.

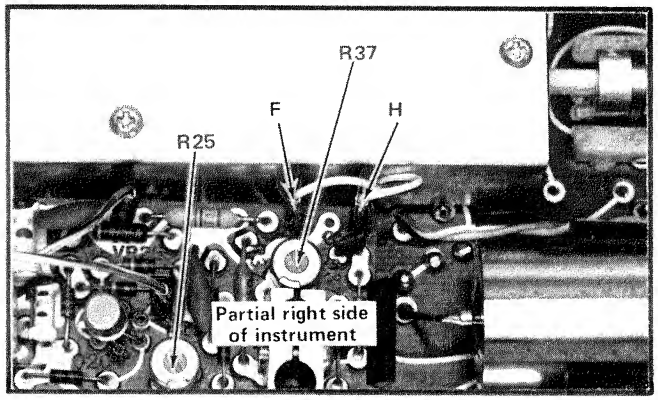

Fig. 5-2. Location of pins for Calibration Step 10.

c. ADJUST—R25 for a four division display on the CRT.

11. Check Horizontal Amplifier Gain

a. Reset the DISPLAY MODE to AMPLIFIER and turn the amplifier VARIABLE control fully clockwise. Apply a 0.1 volt signal from the standard amplitude calibrator to the EXT VOLTS IN connector.

b. CHECK—Display amplitude should be between 3.2 divisions and 4.8 divisions.

c. Reset the SOURCE switch to EXT ÷10 and the standard amplitude calibrator to 1 volt.

d. CHECK—Display amplitude should be between 3.2 divisions and 4.8 divisions.

Partial Procedure

If beginning a partial procedure with this step, set the controls as given under Preliminary Control Settings except as follows:

TIME/DIV 10 ms

12. Check Trigger Bandwidth

a. In the following portions of this step, adjust the 7B70 TIME/DIV and LEVEL/SLOPE as necessary to provide 2 or 3 cycles of triggered waveform.

b. Set the controls as given under Preliminary control settings except as follows:

7B70 TIME/DIV 10 ms

c. Connect a 200 Hz sine wave from the low-frequency sine-wave generator through a "T" connector and coaxial cable to the 7A16A input and from the other side of the "T" connector through a coaxial cable and a 2X attenuator to the EXT TRIG IN connector. Adjust the sine-wave generator for a 0.5 division display on the CRT.

d. CHECK—Using the control settings in Table 5-1, check for stable triggering and a lit TRIG'D lamp for each condition listed. Use the TIME/DIV control as necessary for optimum viewing of display.

TABLE 5-1

7B70		Sine-Wave Generator	
COUPLING	SOURCE	Frequency	Amplitude
AC	INT	200 Hz	0.5 div
AC HF REJ	INT	200 Hz	0.5 div
DC	INT	200 Hz	0.5 div
AC LF REJ	INT	30 kHz	0.5 div
AC HF REJ	INT	50 kHz	0.5 div
AC	EXT	200 Hz	125 mV
AC HF REJ	EXT	200 Hz	125 mV
DC	EXT	200 Hz	125 mV
AC LF REJ	EXT	30 kHz	125 mV
AC HF REJ	EXT	50 kHz	125 mV

e. Change the "T" connector from the low-frequency generator to the Type 191 signal output connector (using a GR to BNC adapter). Set the Type 191 frequency to 20 MHz and adjust the amplitude for 125 millivolts.

f. CHECK—Using the control settings in Table 5-2, check for stable triggering and a lit TRIG'D lamp for each condition listed (see step 12a).

TABLE 5-2

7B70		Type 191	
COUPLING	SOURCE	Frequency	Amplitude
DC	EXT	20 MHz	125 mV
AC	EXT	20 MHz	125 mV
AC LF REJ	EXT	20 MHz	125 mV
DC	INT	20 MHz	0.5 div
AC	INT	20 MHz	0.5 div
AC LF REJ	INT	20 MHz	0.5 div

g. Change the "T" connector from the Type 191 signal generator to the 067-0532-01 Calibration Fixture output connector. Set the Calibration Fixture frequency to 200 MHz and adjust the amplitude for a 1.5 division display.

h. CHECK—Using the control settings in Table 5-3, check for stable triggering and a lit TRIG'D lamp for each condition listed.

TABLE 5-3

7B70		Calibration Fixture	
COUPLING	SOURCE	Frequency	Amplitude
AC	INT	200 MHz	1.5 div
DC	INT	200 MHz	1.5 div
AC LF REJ	INT	200 MHz	1.5 div
AC	EXT	200 MHz	375 mV
DC	EXT	200 MHz	375 mV
AC LF REJ	EXT	200 MHz	375 mV

i. Change the "T" connector from the 067-0532-01 calibration fixture to the low frequency sine-wave generator output connector. Adjust the sine-wave generator for a 0.3 division display of a 30 Hz signal. Reset the TRIGGERING MODE to NORM.

j. CHECK—Using the control settings in Table 5-4, check for stable triggering and a lit TRIG'D lamp for each condition listed (see step 12a).

TABLE 5-4

7B70		Sine-Wave Generator	
COUPLING	SOURCE	Frequency	Amplitude
AC	INT	30 Hz	0.3 div
AC HF REJ	INT	30 Hz	0.3 div
DC	INT	30 Hz	0.3 div
AC LF REJ	INT	30 kHz	0.3 div
AC HF REJ	INT	50 kHz	0.3 div
AC	EXT	30 Hz	75 mV
AC HF REJ	EXT	30 Hz	75 mV
DC	EXT	30 Hz	75 mV
AC LF REJ	EXT	30 kHz	75 mV
AC HF REJ	EXT	50 kHz	75 mV

k. Set the 7B70 COUPLING to DC and change the "T" connector from the low-frequency generator to the Type 191 signal generator output connector (using a GR to BNC adapter). Set the Type 191 frequency to 20 MHz and adjust the amplitude for 75 millivolts.

l. CHECK—Using the control settings in Table 5-5, check for stable triggering and a lit TRIG'D lamp for each condition listed (see step 12a).

TABLE 5-5

7B70		Type 191	
COUPLING	SOURCE	Frequency	Amplitude
DC	EXT	20 MHz	75 mV
AC	EXT	20 MHz	75 mV
AC LF REJ	EXT	20 MHz	75 mV
DC	INT	20 MHz	0.3 div
AC	INT	20 MHz	0.3 div
AC LF REJ	INT	20 MHz	0.3 div

m. Set the 7B70 COUPLING to AC, SOURCE to INT, and change the "T" connector from the Type 191 signal generator to the 067-0532-01 Calibration Fixture output connector. Set the Calibration Fixture frequency to 200 MHz and adjust the amplitude for a a 1.5 division display.

n. CHECK—Using the control settings in Table 5-6, check for stable triggering and a lit TRIG'D lamp for each condition listed (see step 12a).

TABLE 5-6

7B70		Calibration Fixture	
COUPLING	SOURCE	Frequency	Amplitude
AC	INT	200 MHz	1.5 div
DC	INT	200 MHz	1.5 div
AC LF REJ	INT	200 MHz	1.5 div
AC	EXT	200 MHz	375 mV
DC	EXT	200 MHz	375 mV
AC LF REJ	EXT	200 MHz	375 mV

13. Check Sweep Jitter

a. Set the 7B70 TIME/DIV to .02 microsecond, MAGNIFIER to X10, and SOURCE to INT.

b. Set the 067-0532-01 Calibration Fixture to 150 MHz and adjust the amplitude for a four division display.

c. CHECK—For no more than 0.5 division (1 nanosecond) of jitter. Disregard any slow drift.

d. Disconnect the Calibration Fixture, "T" connector, and attenuator.

14. Check Horizontal Amplifier Bandwidth

a. Reset the SOURCE to EXT, COUPLING to AC, and DISPLAY MODE to AMPLIFIER. Connect a 1 kHz signal from the low-frequency sine-wave generator through a 50 Ω BNC cable to the EXT VOLTS IN connector, and adjust the sine-wave generator amplitude for six horizontal divisions of display on the CRT (use the Position control as necessary).

b. CHECK—Reset the sine-wave generator to 100 kHz and check for a display amplitude of at least 4.2 divisions.

15. Check Amplifier VARIABLE Range

a. Adjust the sine-wave generator for an eight division horizontal display on the CRT. (The VARIABLE control must be set fully clockwise.)

b. CHECK—Rotate the VARIABLE control fully counterclockwise and check for 0.8 division or less of horizontal display.

c. Return the VARIABLE control to its fully clockwise position. Disconnect the low-frequency sine-wave generator.

16. Check Line Trigger Source

a. Change the control settings as follows:

7B70

DISPLAY MODE	TIME BASE
TIME/DIV	5 ms
TRIGGERING	
MODE	NORM
COUPLING	AC
SOURCE	LINE
MAGNIFIER	X1

7A16A

Volts/Div	1 V
Coupling	AC

b. Connect a probe from the 7A16A Input to interface connector A4 (plug-in connector at the rear of the 7B70). See Fig. 5-3.

c. CHECK—For stable triggering of the proper polarity with the LEVEL/SLOPE control set to the positive slope and to the negative slope.

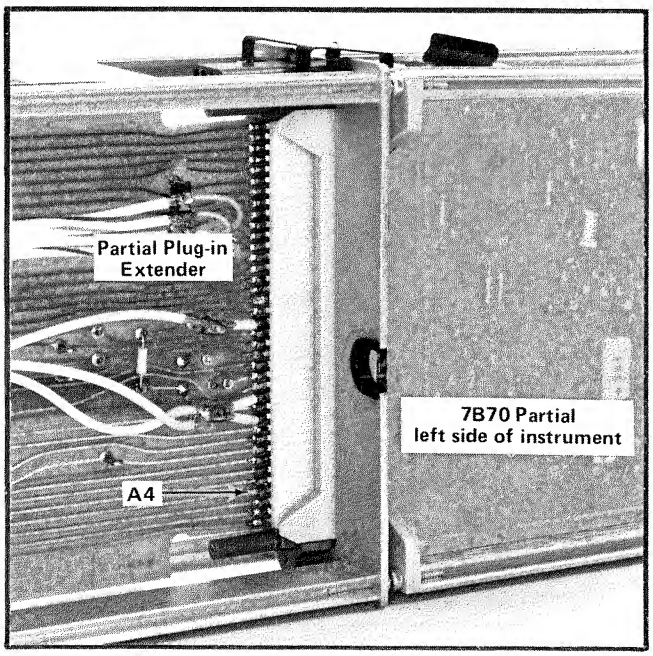

Fig. 5-3. Location of interface connector A4.

Partial Procedure

If beginning a partial procedure with this step, set the controls as given under Preliminary Control Settings except as follows:

7A16A

VOLTS/DIV	2 V

7B70

TIME/DIV	1 ms

17. Check/Adjust Sweep Calibration (SWP CAL, a front-panel adjustment)

a. Set the VOLTS/DIV to 2 V.

b. Set the TIME/DIV to 1 ms, SOURCE to INT, and TRIGGERING MODE to P-P AUTO.

c. Apply 1 ms markers from the 2901 Time-Mark Generator through a 50 Ω cable and 50 Ω termination at the 7A16A input.

d. CHECK—CRT display for one 1 ms marker for each division between the second and tenth vertical lines (see Fig. 5-4).

NOTE

Unless otherwise noted, use the center eight horizontal divisions when checking or adjusting timing.

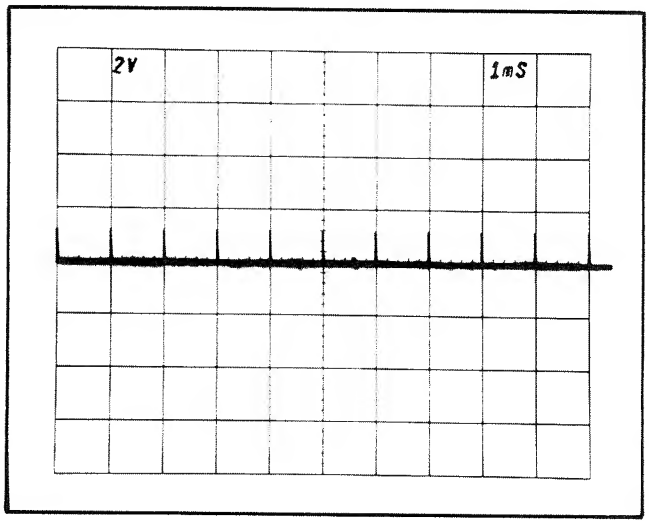

Fig. 5-4. CRT display showing SWP CAL adjustment correctly set.

PERFORMANCE CHECK ONLY

Front-panel adjustment; can be adjusted as part of the performance check.

e. ADJUST—SWP CAL, a front-panel adjust, for one marker for each division. The second and tenth markers must line up with their respective graticule lines (use the horizontal POSITION control as necessary to line up the display).

f. CHECK—The timing accuracy is within 5% over any two division interval within the center eight divisions.

g. INTERACTION: Check Steps 18 through 25.

18. Check/Adjust Magnified Sweep Gain (R785)

a. Set the time-mark generator for .1 ms markers.

b. Set the MAGNIFIER to X10.

c. CHECK—CRT display for one .1 ms marker for each division between the second and tenth vertical lines.

d. ADJUST—R785 (left side toward rear), Magnifier Gain, for one marker for each division. The second and tenth markers must coincide exactly with their respective graticule lines (use the horizontal POSITION control as necessary to line up the display).

e. CHECK—Timing accuracy is within 5% over any two division interval within the center eight divisions.

f. INTERACTION: Check steps 19 and 25.

19. Check/Adjust Magnifier Registration (R795)

a. Set the time-mark generator for 5 ms markers. Set the 7A16 Volts/Div to 1 V.

b. Position the middle marker to the center vertical line (there are three markers on the total magnified sweep) with the horizontal POSITION control. See Fig. 5-5A.

c. CHECK—Set the MAGNIFIER to X1 and check that the middle marker remains at the center vertical line. See Fig. 5-5B.

d. ADJUST—Mag Regis, R795 (left side, lower rear), to position the middle marker to the center vertical line.

e. Set the 7B70 MODE to NORM and alternately switch the MAGNIFIER between X1 and X10 and repeat steps b through e until no shift occurs when switching.

20. Check Sweep Length

a. Set the Time-Mark Generator for 1 ms and .1 ms markers. Reset the MAGNIFIER to X1 and the 7A16A Volts/Div to 2 V (adjust LEVEL/SLOPE as necessary for stable triggering).

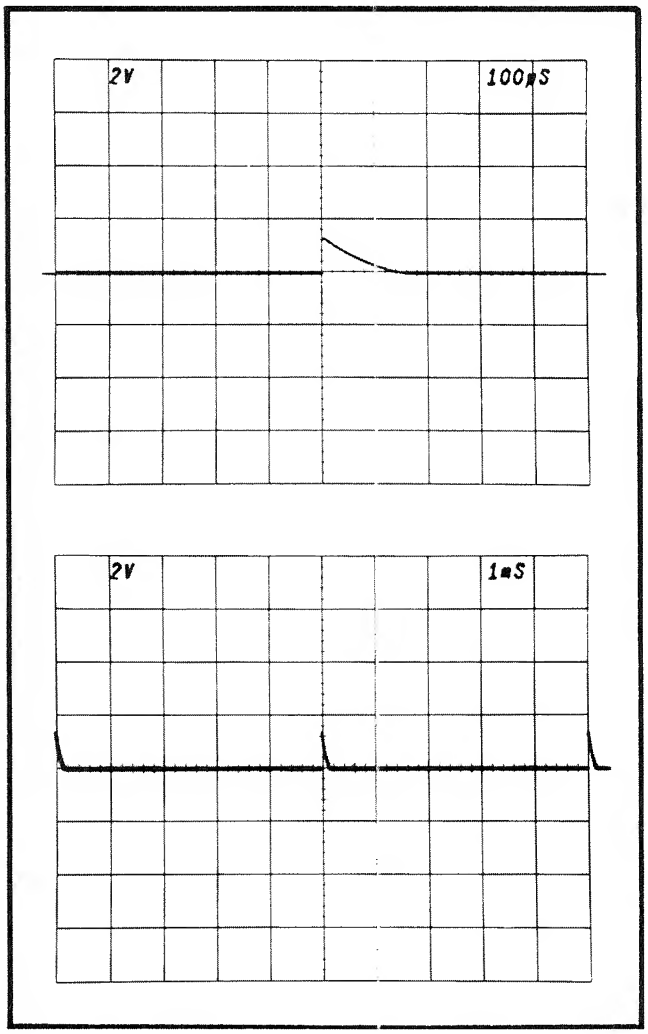

Fig. 5-5. CRT display showing correct magnifier registration. (A) MAGNIFIER set to X10 and (B) MAGNIFIER set to X1.

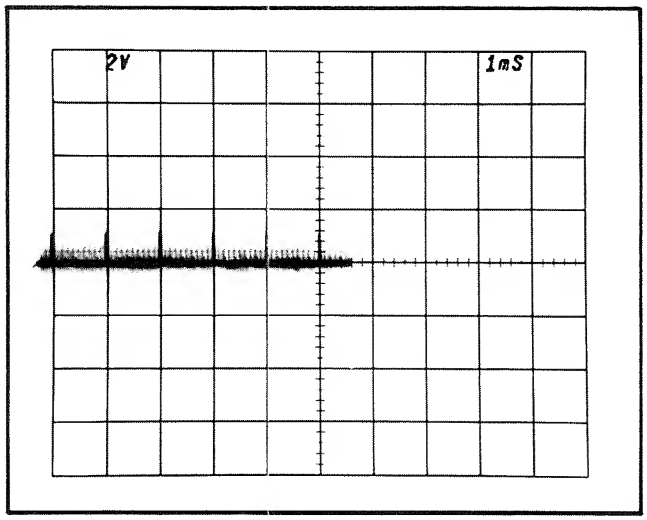

Fig. 5-6. CRT display when checking sweep length.

b. Move the eleventh 1 ms marker to the center vertical line with the horizontal POSITION control. See Fig. 5-6.

c. CHECK—Sweep length must be between 10.5 and 13 divisions.

21. Check Variable Time/Div

a. Reset the TIME/DIV to 2 ms. Set the time-mark generator for 10 ms markers.

b. Press and release the VARIABLE TIME/DIV knob and turn fully counterclockwise.

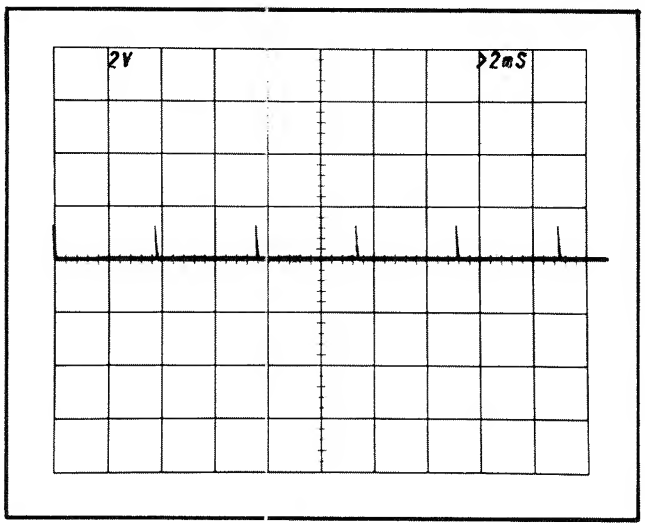

Fig. 5-7. Typical CRT display when checking VARIABLE control range.

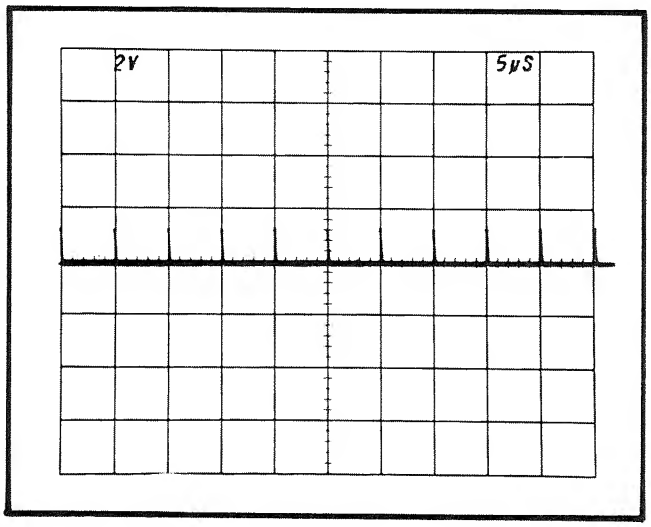

Fig. 5-8. CRT display showing correct 5 μs timing.

c. CHECK—CRT display for a two-division maximum spacing between markers (indicates adequate range for continuously variable sweep rate between the calibrated steps; see Fig. 5-7). Return the VARIABLE TIME/DIV to the CAL IN position.

NOTE

For the following steps, the 7B70 must be installed inside the oscilloscope (not on the extender). If the optional flexible plug-in extender is available, the 7A16A may be connected through it to provide easier access to adjustments on the left side of the 7B70.

22. Check/Adjust 5 μs Timing (C530J)

a. Set the Time-Mark Generator for 5 μs markers.

b. Reset the TIME/DIV to 5 μs and adjust the LEVEL/SLOPE control for a stable display.

c. CHECK—CRT display for one marker each division between the second and tenth vertical lines. Check that sweep timing is within 0.16 division (2%) over the center eight divisions. See Fig. 5-8.

d. ADJUST—C530J (left side, front below center) for one marker each division. The second and tenth markers must coincide exactly with their respective graticule lines.

23. Check/Adjust .2 μs Timing (C530L)

a. Set the time-mark generator for .1 μs markers.

b., Set the TIME/DIV to .2 μs.

c. CHECK—CRT display for two markers each division over the center eight divisions. Check that sweep timing is within 0.16 division (2%) over center eight divisions. See Fig. 5-9.

d. ADJUST—C530L (left side, lower front) for two markers each division. The markers at the second and tenth vertical lines must coincide exactly with their respective graticule lines (use the horizontal POSITION control as necessary to line up the display).

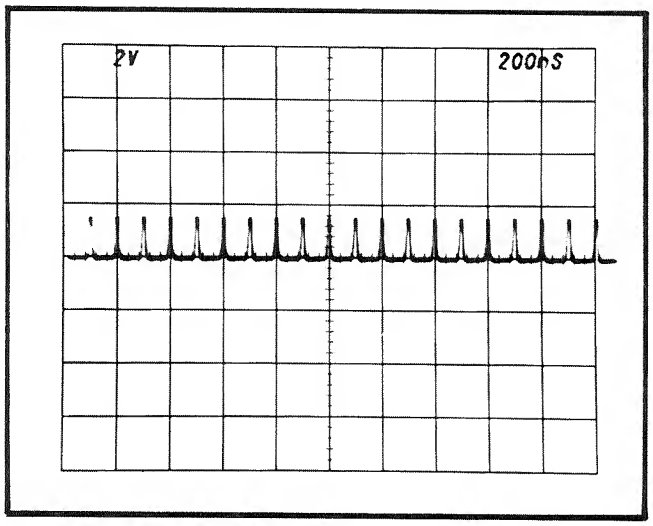

Fig. 5-9. CRT display showing correct 0.2 μs timing.

24. ADJUST—Sweep Start Linearity (C537)

Refer to following Note before attempting adjustment of C537.

NOTE

C537 is a factory adjustment and normally should not require readjustment unless: 1. C537 is replaced because of breakage or other defect. 2. Associated major components replaced. 3. C537 has accidentally been mis-adjusted. Gross misadjustment of C537 can result in waveform instability and sweep foldover near the start of the sweep. C537 adjustment is effective only with higher performance main-frames such as the 7900-series, and may be adjusted to optimize the performance of the plug-in and main-frame as a package. This adjustment should be made with the 7B70 installed in the highest performance main-frame it will be used with. C537 primarily affects the first two screen diameters following the excluded first 12 ns of sweep at the highest magnified sweep speed.

a. Set the controls as specified under Preliminary Control Settings except as follows:

Time-Mark Generator

Markers	5 ns

7B70
(Installed in right (B) horizontal compartment not on extender)

T/DIV	.02 μs
POSITION	Start of sweep near first graticule line
MAGNIFIER	X10

7B71
Removed from the Oscilloscope

7A16A

Volts/Div	Adjust for about 3 divisions display amplitude

Oscilloscope

B Intensity	Adjust for visible display
Vertical Mode	Left
Horizontal Mode	B

b. ADJUST—C537 (bottom left side forward of center) for best linearity of the 12 ns to 52 ns portion of the sweep start. Position the first (excluded) 12 ns portion of the sweep off screen to the left. Adjust C537 for best overall linearity of the next 40 ns portion of the sweep.

25. Check Sweep Timing Accuracy

a. Set MAGNIFIER to X1. Using the control settings given in Table 5-7, check that sweep timing accuracy over the center eight divisions of the display is within the allowable limits.

TABLE 5-7

7B70 TIME/DIV	2901 Markers	Markers/ Div	Allowable Error
0.02 μs	20 ns	1	
.05 μs	50 ns	1	
.1 μs	.1 μs	1	
.2 μs	.1 μs	2	
.5 μs	.5 μs	1	
1 μs	1 μs	1	
2 μs	1 μs	2	
5 μs	5 μs	1	
10 μs	10 μs	1	
20 μs	10 μs	2	
50 μs	50 μs	1	
.1 ms	.1 ms	1	±0.16 div
.2 ms	.1 ms	2	
.5 ms	.5 ms	1	
1 ms	1 ms	1	
2 ms	1 ms	2	
5 ms	5 ms	1	
10 ms	10 ms	1	
20 ms	10 ms	2	
50 ms	50 ms	1	
.1 s	.1 s	1	
.2 s	.1 s	2	
.5 s	.5 s	1	
1 s	1 s	1	
2 s	1 s	2	±0.24 div
5 s	5 s	1	

26. Check Magnified Sweep Timing

a. CHECK—With the MAGNIFIER set to X10, use the control settings given in Table 5-8 to check timing accuracy over the center eight divisions. Adjust Volts/Div, B Intensity, and triggering for a stable display.

TABLE 5-8

7B70 TIME/DIV	2901 Markers	Markers/ Div	Allowable Error
.02 μs	10 ns	1 cycle/5 div	0.13 div/5 div
.05 μs	5 ns	1	
.1 μs	10 ns	1	
.2 μs	20 ns	1	
.5 μs	50 ns	1	
1 μs	.1 μs	1	
2 μs	.1 μs	2	
5 μs	.5 μs	1	
10 μs	1 μs	1	
20 μs	1 μs	2	
50 μs	5 μs	1	
.1 ms	10 μs	1	
.2 ms	10 μs	2	
.5 ms	50 μs	1	±0.2 div
1 ms	.1 ms	1	
2 ms	.1 ms	2	
5 ms	.5 ms	1	
10 ms	1 ms	1	
20 ms	1 ms	2	
50 ms	5 ms	1	
.1 s	10 ms	1	
.2 s	10 ms	2	
.5 s	50 ms	1	
1 s	.1 s	1	
2 s	.1 s	2	±0.28 div
5 s	.5 s	1	

b. Reset the MAGNIFIER to X1. Disconnect the time-mark generator.

27. Check Sweep Holdoff Time

a. Install the 7B70 (on the rigid extender to allow probe access to TP566) in the B Horizontal Plug-In Compartment. Change the control settings as follows:

7A16A

Volts/Div	.2 V

7B70

TRIGGERING	
MODE	P-P AUTO
COUPLING	AC
SOURCE	INT
DISPLAY MODE	TIME BASE
TIME/DIV	.02 μs
MAGNIFIER	X1

Test Time Base[2] (Installed in the A Horizontal Plug-In Compartment)

Level/Slope	Centered on Positive Slope
Triggering	
Mode	Norm
Coupling	AC
Source	Int
B Delay Mode	Independent
Magnifier	X1
Time/Div	.5 μs
Position	Midrange
Variable Time/Div	Cal In

Oscilloscope

Vertical Mode	Left
Horizontal Mode	A
A Trigger Source	Left Vert
B Trigger Source	Right Vert
A Intensity	Adjust for viewable trace

b. Connect a 10X probe from the 7A16A to TP566 (near R785, left side, lower rear) on the 7B70 Time Base board.

c. CHECK—The holdoff time (see Fig. 5-10) corresponds to the values given in Table 5-9.

[2] If a test time base other than the 7B71 is used, refer to the instruction manual for the time base being used for appropriate control settings.

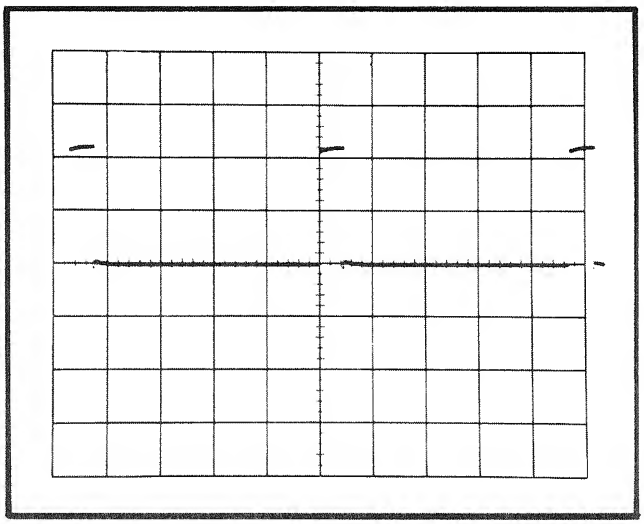

Fig. 5-10. CRT display when checking sweep holdoff time.

TABLE 5-9

7B70 TIME/DIV	7B71 TIME/DIV	HOLDOFF (Equal or less than)
.02 μs	.5 μs	3.5 μs
.05 μs	.5 μs	3.5 μs
.1 μs	1 μs	3.5 μs
.2 μs	1 μs	3.5 μs
.5 μs	5 μs	3.5 μs
1 μs	5 μs	3.5 μs
2 μs	5 μs	3.5 μs
5 μs	10 μs	7.5 μs
10 μs	20 μs	15 μs
20 μs	50 μs	30 μs
50 μs	.1 ms	75 μs
.1 ms	.2 ms	.15 ms
.2 ms	.5 ms	.3 ms
.5 ms	1 ms	.75 ms
1 ms	2 ms	1.5 ms
2 ms	5 ms	3 ms
5 ms	10 ms	7.5 ms
10 ms	20 ms	15 ms
20 ms	50 ms	30 ms
50 ms	.1 s	75 ms
.1 s	.2 s	.15 s
.2 s	.2 s	.15 s
.5 s	.2 s	.15 s
1 s	.2 s	.15 s
2 s	.2 s	.15 s
5 s	.2 s	.15 s

This completes the calibration of the 7B70 Time Base.

ELECTRICAL PARTS LIST

Replacement parts should be ordered from the Tektronix Field Office or Representative in your area. Changes to Tektronix products give you the benefit of improved circuits and components. Please include the instrument type number and serial number with each order for parts or service.

ABBREVIATIONS AND REFERENCE DESIGNATORS

A	Assembly, separable or repairable	FL	Filter	PTM	paper or plastic, tubular molded
AT	Attenuator, fixed or variable	H	Heat dissipating device (heat sink, etc.)	R	Resistor, fixed or variable
B	Motor	HR	Heater	RT	Thermistor
BT	Battery	J	Connector, stationary portion	S	Switch
C	Capacitor, fixed or variable	K	Relay	T	Transformer
Cer	Ceramic	L	Inductor, fixed or variable	TP	Test point
CR	Diode, signal or rectifier	LR	Inductor/resistor combination	U	Assembly, inseparable or non-repairable
CRT	cathode-ray tube	M	Meter	V	Electron tube
DL	Delay line	Q	Transistor or silicon-controlled rectifier	Var	Variable
DS	Indicating device (lamp)	P	Connector, movable portion	VR	Voltage regulator (zener diode, etc.)
Elect.	Electrolytic	PMC	Paper, metal cased	WW	wire-wound
EMC	electrolytic, metal cased	PT	paper, tubular	Y	Crystal
EMT	electrolytic, metal tubular				
F	Fuse				

Ckt. No.	Tektronix Part No.	Serial/Model No. Eff	Disc	Description
		CHASSIS		
BULB				
DS347	150-0048-01			Incandescent #683, selected
CAPACITORS				
C530A	295-0165-00 [1]			10uF,
C530B				1uF,
C530E				0.1uF, Timing capacitor assembly
C530F				0.01uF,
C530H				995pF,
CONNECTOR				
J1	131-0955-00			Receptacle, electrical, BNC
RESISTORS				
R146A	311-0912-00 [2]			2.5K ohm, Var
R146B				10K ohm, Var
R194	311-0091-00			1K ohm, Var
R740	311-0486-00			500 ohm, Var
R744A	311-1162-00			10K ohm, Var
R744B				10K ohm, Var
SWITCH				
S146	311-0972-00			SLOPE

[1] Individual timing capacitors in this assembly must be ordered by the 9 digit part number, letter suffix and tolerance printed on the timing capacitor to be replaced. The letter suffix and the tolerance should be the same for all of the timing capacitors in the assembly.
Example: 285-XXXX-XX F-

[2] Furnished as a unit with S146.

Ckt. No.	Tektronix Part No.	Serial/Model No. Eff	Disc	Description
	670-1144-00			EXTERNAL INPUT Circuit Board Assembly
CAPACITORS				
C1	281-0534-00			3.3pF, Cer, ±0.25pF
C2	283-0068-00			0.01uF, Cer, 500V, +100%-0%
C3	283-0080-00			0.022uF, Cer, 25V, +80%-20%
C5	281-0718-00			15.8pF, Cer, 500V, 1%
C6	283-0080-00			0.022uF, Cer, 25V, +80%-20%
C10	281-0632-00			35pF, Cer, 500V, 1%
C12	281-0653-00			3.3pF, Cer, 200V, ±1pF
C13	281-0534-00			3.3pF, Cer, ±0.25pF
C15	281-0610-00			2.2pF, Cer, 200V, ±0.1pF
C31	283-0156-00			1000pF, Cer, 200V, 10%
C39	283-0156-00			1000pF, Cer, 200V, 10%
C55	283-0080-00			0.022uF, Cer, 25V, +80%-20%
C57	283-0080-00			0.022uF, Cer, 25V, +80%-20%
DIODE				
CR15	152-0246-00			Silicon, CD12676 or FD3375
RELAYS				
K3	148-0035-00			Armature, spdt, 15V DC
K6	148-0034-00			Armature, dpdt, 15V DC
TRANSISTORS				
Q20A,B	151-1009-00			Silicon, FET, N channel junction, dual
Q30	151-0221-00			Silicon, PNP, 2N4258
Q37	151-0221-00			Silicon, PNP, 2N4258
RESISTORS				
R1	315-0270-00			27 ohm, 0.25W, 5%
R2	315-0101-00			100 ohm, 0.25W, 5%
R5	323-0452-00			499K ohm, 0.50W, 1%
R7	321-0452-00			499K ohm, 0.125W, 1%
R8	321-0448-00			453K ohm, 0.125W, 1%
R10	315-0390-00			39 ohm, 0.25W, 5%
R11	321-0361-00			56.2K ohm, 0.125W, 1%
R12	315-0270-00			27 ohm, 0.25W, 5%
R15	315-0100-00			10 ohm, 0.25W, 5%
R16	315-0270-00			27 ohm, 0.25W, 5%
R20	315-0101-00			100 ohm, 0.25W, 5%
R22	315-0392-00			3.9K ohm, 0.25W, 5%
R23	315-0391-00			390 ohm, 0.25W, 5%
R25	311-0634-00			500 ohm, Var
R26	315-0392-00			3.9K ohm, 0.25W, 5%
R27	315-0270-00			27 ohm, 0.25W, 5%
R28	315-0101-00			100 ohm, 0.25W, 5%
R31	315-0331-00			330 ohm, 0.25W, 5%

Ckt. No.	Tektronix Part No.	Serial/Model No. Eff	Disc	Description
RESISTORS (cont)				
R33	321-0185-00			825 ohm, 0.125W, 1%
R34	315-0360-00			36 ohm, 0.25W, 5%
R36	321-0174-00			634 ohm, 0.125W, 1%
R37	311-0634-00			500 ohm, Var
R39	315-0331-00			330 ohm, 0.25W, 5%
DIODE, ZENER				
VR25	152-0127-00			Zener, 1N755A, 0.4W, 7.5V, 5%
	670-1136-05	TRIGGER Circuit Board Assembly		
CAPACITORS				
C44	283-0080-00			0.022uF, Cer, 25V, +80%-20%
C48	283-0000-00			0.001uF, Cer, 500V, +100%-0%
C100	281-0544-00			5.6pF, Cer, 500V, 10%
C104	281-0544-00			5.6pF, Cer, 500V, 10%
C106	283-0000-00			0.001uF, Cer, 500V, +100%-0%
C108	283-0000-00			0.001uF, Cer, 500V, +100%-0%
C128	283-0059-00			1uF, Cer, 25V, +80%-20%
C129	290-0134-00			22uF, Elect., 15V, 20%
C136	283-0080-00			0.022uF, Cer, 25V, +80%-20%
C138	283-0079-00			0.1uF, Cer, 250V, 20%
C141	281-0593-00			3.9pF, Cer, 500V, 10%
C147	281-0593-00			3.9pF, Cer, 500V, 10%
C150	281-0629-00			33pF, Cer, 600V, 5%
C152	281-0543-00			270pF, Cer, 500V, 10%
C156	281-0629-00			33pF, Cer, 600V, 5%
C170	281-0534-00			3.3pF, Cer, 500V, ±0.25pF
C171	281-0534-00			3.3pF, Cer, 500V, ±0.25pF
C173	283-0000-00			0.001uF, Cer, 500V, +100%-0%
C176	281-0552-00			25pF, Cer, 500V
C178	283-0002-00			0.01uF, Cer, 500V
C179	283-0000-00			0.001uF, Cer, 500V, +100%-0%
C181	281-0541-00	XB210000		6.8pF, Cer, 500V,10%
C188	281-0593-00			3.9pF, Cer, 200V, 10%
C198	283-0059-00			1uF, Cer, 25V, +80%-20%
C199A	283-0059-00			1uF, Cer, 25V, +80%-20%
C199B	283-0059-00			1uF, Cer, 25V, +80%-20%
C200	281-0511-00			22pF, Cer, 500V, 10%
C201	283-0059-00			1uF, Cer, 25V, +80%-20%
C203	281-0511-00			22pF, Cer, 500V, 10%
C204	283-0059-00			1uF, Cer, 25V, +80%-20%
C207	283-0080-00			0.022uF, Cer, 25V, +80%-20%
C209	290-0267-00			1uF, Elect., 35V
C210	281-0523-00			100pF, Cer, 350V, 20%
C212	281-0523-00			100pF, Cer, 350V, 20%
C248	283-0010-00			0.05uF, Cer, 50V

Ckt. No.	Tektronix Part No.	Serial/Model No. Eff	Disc	Description
CAPACITORS (cont)				
C255	283-0010-00			0.05uF, Cer, 50V
C268	283-0604-00			304pF, Mica, 300V, 2%
C275	281-0523-00			100pF, Cer, 350V, 20%
C282	283-0002-00			0.01uF, Cer, 500V
C303	283-0159-00			18pF, Cer, 50V, 5%
C312	283-0080-00			0.022uF, Cer, 25V, +80%-20%
C315	283-0156-00			0.001uF, Cer, 200V, 10%
C319	283-0080-00			0.022uF, Cer, 25V, +80%-20%
C320	281-0662-00			10pF, Cer, 500V, ±0.5pF
C324	283-0175-00			10pF, Cer, 200V, 5%
C331	283-0000-00			0.001uF, Cer, 500V, +100%-0%
C332	283-0159-00			18pF, Cer, 50V, 5%
C336	283-0080-00			0.022uF, Cer, 25V, +80%-20%
C339	290-0305-01			3uF, Elect., 150V, 10%
C363	283-0059-00			1uF, Cer, 25V, +80%-20%
C403	290-0523-00			2.2uF, Elect., 20V,20%
C405	290-0523-00			2.2uF, Elect., 20V, 20%
C407	290-0523-00			2.2uF, Elect., 20V, 20%
C409	290-0523-00			2.2uF, Elect., 20V, 20%
DIODES				
CR148	152-0153-00			Silicon, FD7003 or CD5574
CR149	152-0153-00			Silicon, FD7003 or CD5574
CR181	152-0322-00			Silicon, A1108
CR182	152-0322-00			Silicon, A1108
CR190	152-0185-00			Silicon, similar to 1N4152
CR205	152-0322-00			Silicon, A1108
CR210	152-0322-00			Silicon, A1108
CR212	152-0322-00			Silicon, A1108
CR319	152-0322-00			Silicon, A1108
CR320	152-0185-00			Silicon, similar to 1N4152
CR331	152-0075-00			Germanium, GD238 or ED48
CR342	152-0185-00			Silicon, similar to 1N4152
CR355	152-0185-00			Silicon, similar to 1N4152
CR357	152-0185-00			Silicon, similar to 1N4152
RELAYS				
K44	148-0034-00			Armature, dpdt, 15V DC
K48	148-0034-00			Armature, dpdt, 15V DC
K138	148-0034-00			Armature, dpdt, 15V DC
INDUCTORS				
L100	108-0577-00			30nH
L104	108-0577-00			30nH
L140	108-0581-00			100nH
L141	108-0369-00			0.12uH
L146	108-0581-00			100nH

Ckt. No.	Tektronix Part No.	Serial/Model No. Eff	Disc	Description
INDUCTORS (cont)				
L147	108-0369-00			0.12uH
L148	108-0578-00			45nH
L149	108-0578-00			45nH
L170	108-0579-00			120nH
L171	108-0579-00			120nH
L304	108-0580-00			90nH
L310	108-0317-00			15uH
L318	108-0370-00			0.14uH
TRANSISTORS				
Q107	151-0220-00			Silicon, PNP, 2N4122
Q108	151-0220-00			Silicon, PNP, 2N4122
Q110	151-0220-00			Silicon, PNP, 2N4122
Q116	151-0220-00			Silicon, PNP, 2N4122
Q120	151-0224-00			Silicon, NPN, 2N3692
Q126	151-0224-00			Silicon, NPN, 2N3692
Q131	151-0220-00			Silicon, PNP, 2N4122
Q134	151-0220-00			Silicon, PNP, 2N4122
Q150	151-0259-00			Silicon, NPN, selected from 2N3563
Q156	151-0259-00			Silicon, NPN, selected from 2N3563
Q158	151-0198-00			Silicon, NPN, MPS918
Q159	151-0198-00			Silicon, NPN, MPS918
Q161	151-0188-00			Silicon, PNP, 2N3906
Q168	151-0198-00			Silicon, NPN, MPS918
Q169	151-0198-00			Silicon, NPN, MPS918
Q170	151-0198-00			Silicon, NPN, MPS918
Q171	151-0198-00			Silicon, NPN, MPS918
Q181	151-0223-00			Silicon, NPN, 2N4275
Q182	151-0223-00			Silicon, NPN, 2N4275
Q220	151-0221-02			Silicon, PNP, 2N4258
Q221	151-0221-02			Silicon, PNP, 2N4258
Q224	151-0190-01			Silicon, NPN, 2N3904 or TE3904
Q235	151-0221-02			Silicon, PNP, 2N4258
Q236	151-0221-02			Silicon, PNP, 2N4258
Q238	151-0190-01			Silicon, NPN, 2N3904 or TE3904
Q248	151-1006-00			Silicon, FET, U1491
Q255	151-1006-00			Silicon, FET, U1491
Q309	151-0271-00			Silicon, PNP, SAB4113
Q317	151-0271-00			Silicon, PNP, SAB4113
Q326	151-0190-02			Silicon, NPN, 2N3904
Q328	151-0190-02			Silicon, NPN, 2N3904
Q331	151-0221-00			Silicon, PNP, 2N4258
Q338	151-0190-01			Silicon, NPN, 2N3904 or TE3904
Q339	151-0220-00			Silicon, PNP, 2N4122
Q346	151-0220-00			Silicon, PNP, 2N4122
Q348	151-0192-00			Silicon, NPN, selected from MPS6521

Ckt. No.	Tektronix Part No.	Serial/Model No. Eff	Disc	Description
TRANSISTORS (cont)				
Q350	151-0220-00			Silicon, PNP, 2N4122
Q360	151-0223-00			Silicon, NPN, 2N4275
Q368	151-0223-00			Silicon, NPN, 2N4275
Q370	151-0223-00			Silicon, NPN, 2N4275
Q377	151-0223-00			Silicon, NPN, 2N4275
RESISTORS				
R40	322-0215-00			1.69K ohm, 0.25W, 1%
R42	322-0215-00			1.69K ohm, 0.25W, 1%
R47	321-0068-00			49.9 ohm, 0.125W, 1%
R49	321-0068-00			49.9 ohm, 0.125W, 1%
R100	315-0560-00			56 ohm, 0.25W, 5%
R101	321-0072-00			54.9 ohm, 0.125W, 1%
R103	321-0072-00			54.9 ohm, 0.125W, 1%
R104	315-0560-00			56 ohm, 0.25W, 5%
R106	315-0470-00			47 ohm, 0.25W, 5%
R107	321-0046-00			29.4 ohm, 0.125W, 1%
R108	315-0470-00			47 ohm, 0.25W, 5%
R110	315-0820-00			82 ohm, 0.25W, 5%
R111	321-0193-00			1K ohm, 0.125W, 1%
R112	323-0161-00			464 ohm, 0.50W, 1%
R113	321-0047-00			30.1 ohm, 0.125W, 1%
R114	323-0161-00			464 ohm, 0.50W, 1%
R116	315-0820-00			82 ohm, 0.25W, 5%
R117	321-0193-00			1K ohm, 0.125W, 1%
R119	321-0288-00			9.76K ohm, 0.125W, 1%
R120	321-0291-00			10.5K ohm, 0.125W, 1%
R121	311-1263-00			1K ohm, Var
R122	321-0282-00			8.45K ohm, 0.125W, 1%
R124	315-0102-00			1K ohm, 0.25W, 5%
R126	321-0288-00			9.76K ohm, 0.125W, 1%
R127	321-0293-00			11K ohm, 0.125W, 1%
R128	321-0285-00			9.09K ohm, 0.125W, 1%
R129	315-0102-00			1K ohm, 0.25W, 5%
R130	315-0152-00			1.5K ohm, (nominal value), selected
R132	315-0122-00			1.2K ohm, 0.25W, 5%
R133	315-0122-00			1.2K ohm, 0.25W, 5%
R135	315-0361-00			360 ohm, 0.25W, 5%
R136	315-0102-00			1K ohm, 0.25W, 5%
R141	323-0151-00			365 ohm, 0.50W, 1%
R142	315-0511-00			510 ohm, 0.25W, 5%
R143	321-0115-00			154 ohm, 0.125W, 1%
R144	321-0115-00			154 ohm, 0.125W, 1%
R145	315-0511-00			510 ohm, 0.25W, 5%
R147	323-0151-00			365 ohm, 0.50W, 1%
R148	315-0223-00			22K ohm, 0.25W, 5%

Ckt. No.	Tektronix Part No.	Serial/Model No. Eff	Disc	Description
RESISTORS (cont)				
R149	315-0223-00			22K ohm, 0.25W, 5%
R150	315-0560-00			56 ohm, 0.25W, 5%
R152	321-0045-00			28.7 ohm, 0.125W, 1%
R153	323-0153-00			383 ohm, 0.50W, 1%
R154	321-0045-00			28.7 ohm, 0.125W, 1%
R155	311-0633-00			5K ohm, Var
R156	315-0560-00			56 ohm, 0.25W, 5%
R157	315-0510-00			51 ohm, 0.25W, 5%
R158	315-0562-00			5.6K ohm, 0.25W, 5%
R159	315-0122-00			1.2K ohm, 0.25W, 5%
R160	315-0392-00			3.9K ohm, 0.25W, 5%
R163	315-0392-00			3.9K ohm, 0.25W, 5%
R165	315-0432-00			4.3K ohm, 0.25W, 5%
R166	315-0112-00			1.1K ohm, 0.25W, 5%
R167	315-0562-00			5.6K ohm, 0.25W, 5%
R170	321-0096-00			97.6 ohm, 0.125W, 1%
R171	321-0096-00			97.6 ohm, 0.125W, 1%
R173	315-0201-00			200 ohm, 0.25W, 5%
R175	307-0115-00			7.5 ohm, 0.25W, 5%
R176	321-0201-00			1.21K ohm, 0.125W, 1%
R177	307-0115-00			7.5 ohm, 0.25W, 5%
R178	315-0100-00			10 ohm, 0.25W, 5%
R179	315-0201-00			200 ohm, 0.25W, 5%
R181	315-0113-00			11K ohm, 0.25W, 5%
R182	315-0332-00			3.3K ohm, 0.25W, 5%
R183	321-0229-00			2.37K ohm, 0.125W, 1%
R184	321-0229-00			2.37K ohm, 0.125W, 1%
R185	315-0822-00			8.2K ohm, 0.25W, 5%
R186	311-0634-00			500 ohm, Var
R187	321-0313-00			17.8K ohm, 0.125W, 1%
R190	315-0203-00			20K ohm, 0.25W, 5%
R191	321-0313-00			17.8K ohm, 0.125W, 1%
R201	315-0512-00			5.1K ohm, 0.25W, 5%
R203	315-0512-00			5.1K ohm, 0.25W, 5%
R205	315-0104-00			100K ohm, 0.25W, 5%
R209	315-0512-00			5.1K ohm, 0.25W, 5%
R210	315-0221-00			220 ohm, 0.25W, 5%
R212	315-0221-00			220 ohm, 0.25W, 5%
R214	315-0155-00			1.5M ohm, 0.25W, 5%
R215	315-0472-00			4.7K ohm, 0.25W, 5%
R217	315-0124-00			120K ohm, 0.25W, 5%
R219	315-0153-00			15K ohm, 0.25W, 5%
R221	315-0162-00			1.6K ohm, 0.25W, 5%
R225	307-0112-00			4.3 ohm, 0.25W, 5%
R230	315-0155-00			1.5M ohm, 0.25W, 5%

Ckt. No.	Tektronix Part No.	Serial/Model No. Eff	Disc	Description
RESISTORS (cont)				
R231	315-0472-00			4.7K ohm, 0.25W, 5%
R233	315-0124-00			120K ohm, 0.25W, 5%
R234	315-0153-00			15K ohm, 0.25W, 5%
R235	315-0162-00			1.6K ohm, 0.25W, 5%
R239	307-0112-00			4.3 ohm, 0.25W, 5%
R241	315-0106-00			10M ohm, 0.25W, 5%
R243	315-0474-00			470K ohm, 0.25W, 5%
R244	315-0623-00			62K ohm, 0.25W, 5%
R246	315-0106-00			10M ohm, 0.25W, 5%
R248	315-0510-00			51 ohm, 0.25W, 5%
R250	321-0240-00			3.09K ohm, 0.125W, 1%
R251	311-1259-00			100 ohm, Var
R252	321-0219-00			1.87K ohm, 0.125W, 1%
R253	321-0260-00			4.99K ohm, 0.125W, 1%
R255	315-0510-00			51 ohm, 0.25W, 5%
R257	321-0240-00			3.09K ohm, 0.125W, 1%
R258	311-1259-00			100 ohm, Var
R259	321-0219-00			1.87K ohm, 0.125W, 1%
R260	321-0260-00			4.99K ohm, 0.125W, 1%
R265	315-0102-00			1K ohm, 0.25W, 5%
R275	321-0289-00			10K ohm, 0.125W, 1%
R282	315-0102-00			1K ohm, 0.25W, 5%
R284	315-0123-00			12K ohm, 0.25W, 5%
R300	315-0620-00			62 ohm, 0.25W, 5%
R301	321-0158-00			432 ohm, 0.125W, 1%
R302	321-0135-00			249 ohm, 0.125W, 1%
R303	315-0430-00			43 ohm, 0.25W, 5%
R306	315-0620-00			62 ohm, 0.25W, 5%
R307	321-0177-00			681 ohm, 0.125W, 1%
R310	315-0471-00			470 ohm, 0.25W, 5%
R312	315-0100-00			10 ohm, 0.25W, 5%
R313	321-0201-00			1.21K ohm, 0.125W, 1%
R315	315-0200-00			20 ohm, 0.25W, 5%
R318	315-0151-00			150 ohm, 0.25W, 5%
R319	315-0752-00			7.5K ohm, 0.25W, 5%
R320	315-0751-00			750 ohm, 0.25W, 5%
R322	315-0391-00			390 ohm, 0.25W, 5%
R324	315-0301-00			300 ohm, 0.25W, 5%
R326	315-0200-00			20 ohm, 0.25W, 5%
R327	315-0242-00			2.4K ohm, 0.25W, 5%
R328	315-0152-00			1.5K ohm, 0.25W, 5%
R329	315-0200-00			20 ohm, 0.25W, 5%
R331	321-0161-00			464 ohm, 0.125W, 1%
R333	315-0102-00			1K ohm, 0.25W, 5%
R334	315-0183-00			18K ohm, 0.25W, 5%

Ckt. No.	Tektronix Part No.	Serial/Model No. Eff	Disc	Description
RESISTORS (cont)				
R335	315-0202-00			2K ohm, 0.25W, 5%
R336	315-0102-00			1K ohm, 0.25W, 5%
R339	315-0471-00			470 ohm, 0.25W, 5%
R340	315-0102-00			1K ohm, 0.25W, 5%
R341	315-0303-00			30K ohm, 0.25W, 5%
R342	315-0102-00			1K ohm, 0.25W, 5%
R343	315-0154-00			150K ohm, 0.25W, 5%
R344	315-0223-00			22K ohm, 0.25W, 5%
R346	315-0302-00			3K ohm, 0.25W, 5%
R353	321-0321-00			21.5K ohm, 0.125W, 1%
R354	321-0285-00			9.09K ohm, 0.125W, 1%
R356	321-0177-00			681 ohm, 0.125W, 1%
R357	321-0239-00			3.01K ohm, 0.125W, 1%
R361	321-0126-00			200 ohm, 0.125W, 1%
R363	307-0111-00			3.6 ohm, 0.25W, 5%
R364	321-0144-00			309 ohm, 0.125W, 1%
R366	321-0122-00			182 ohm, 0.125W, 1%
R367	321-0030-00			20 ohm, 0.125W, 1%
R370	323-0192-00			976 ohm, 0.50W, 1%
R371	315-0103-00			10K ohm, 0.25W, 5%
R372	315-0103-00			10K ohm, 0.25W, 5%
R374	315-0101-00			100 ohm, 0.25W, 5%
R377	315-0391-00			1.8K ohm, 0.25W, 5%
R379	315-0182-00			390 ohm, 0.25W, 5%
R380	315-0100-00			10 ohm, 0.25W, 5%
R403	307-0106-00			4.7 ohm, 0.25W, 5%
R405	307-0106-00			4.7 ohm, 0.25W, 5%
R407	307-0106-00			4.7 ohm, 0.25W, 5%
R409	307-0106-00			4.7 ohm, 0.25W, 5%
INTEGRATED CIRCUITS				
U192	156-0077-00			Single operational amplifier, LM301A
U260	156-0049-00			Operational amplifier, uA741C
U267	156-0049-00			Operational amplifier, uA741C
DIODES, TUNNEL				
VR304	152-0140-01			Tunnel, 10mA, 8pF
VR322	152-0125-00			Tunnel, TD3A, 4.7mA, Tek Spec
VR358	152-0125-00			Tunnel, TD3A, 4.7mA, Tek Spec

Ckt. No.	Tektronix Part No.	Serial/Model No. Eff	Disc	Description
	670-1137-03			INTERFACE Circuit Board Assembly
CAPACITORS				
C280	290-0267-00			1uF, Elect., 35V
C530P	281-0523-00			100pF, Cer, 350V, 20%
C530R	281-0536-00			1000pF, Cer, 500V, 10%
C530S	283-0599-00			98pF, Mica, 500V, 5%
DIODES				
CR44	152-0185-00			Silicon, similar to 1N4152
CR461	152-0185-00			Silicon, similar to 1N4152
CR531	152-0185-00			Siilcon, similar to 1N4152
CR702	152-0185-00			Silicon, similar to 1N4152
RESISTORS				
R197	315-0123-00			12K ohm, 0.25W, 5%
R280	315-0513-00			51K ohm, 0.25W, 5%
R347	315-0200-00			20 ohm, 0.25W, 5%
R460	315-0472-00			4.7K ohm, 0.25W, 5%
R461	315-0752-00			7.5K ohm, 0.25W, 5%
R530A	323-0568-08			8.06M ohm, 0.50W, 1%
R530B	323-0557-08			6.19M ohm, 0.50W, 1%
R530C	323-0546-08			4.75M ohm, 0.50W, 1%
R530D	323-0546-08			4.75M ohm, 0.50W, 1%
R530F	323-0767-07			1.425M ohm, 0.50W, 0.1%
R530H	323-0450-07			475K ohm, 0.50W, 0.1%
R530J	323-0450-07			475K ohm, 0.50W, 0.1%
R530K	323-0774-07			118.7K ohm, 0.50W, 0.1%
R530L	323-0354-07			47.5K ohm, 0.50W, 0.1%
R530M	321-0267-00			5.9K ohm, 0.125W, 1%
R530N	323-0775-07			71.25K ohm, 0.50W, 0.1%
R530P	315-0330-00			33 ohm, 0.25W, 5%
R530R	315-0220-00			22 ohm, 0.25W, 5%
R530S	315-0390-00			39 ohm, 0.25W, 5%
R531	311-0959-00			10K ohm, Var
R701	315-0154-00			150K ohm, 0.25W, 5%
R702	315-0133-00			13K ohm, 0.25W, 5%
R704	315-0154-00			150K ohm, 0.25W, 5%
R705	321-0344-00			37.4K ohm, 0.125W, 1%
R706	315-0753-00			75K ohm, 0.25W, 5%
R711	315-0753-00			75K ohm, 0.25W, 5%
R712	315-0154-00			150K ohm, 0.25W, 5%
R713	315-0753-00			75K ohm, 0.25W, 5%
R715	315-0154-00			150K ohm, 0.25W, 5%
R721	315-0753-00			75K ohm, 0.25W, 5%
R722	315-0154-00			150K ohm, 0.25W, 5%
R723	315-0154-00			150K ohm, 0.25W, 5%

Ckt. No.	Tektronix Part No.	Serial/Model No. Eff	Disc	Description
RESISTORS (cont)				
R724	321-0356-00			49.9K ohm, 0.125W, 1%
R727	321-0335-00			30.1K ohm, 0.125W, 1%
R728	321-0344-00			37.4K ohm, 0.125W, 1%
R729	315-0154-00			150K ohm, 0.25W, 5%
SWITCHES				
S530[1]	670-1137-03			Cam, TIME/DIV
S531[2]				CAL IN
	670-1139-04			DISPLAY MODE Circuit Board Assembly
BULB				
DS195	150-0048-01			Incandescent #683, selected
RESISTOR				
R264	321-0338-00			32.4K ohm, 0.125W, 1%
SWITCH				
S195[1]	670-1139-04			Pushbutton, TIME/BASE-AMPLIFIER
	670-1146-02			COUPLING Circuit Board Assembly
BULB				
DS270	150-0048-01			Incandescent #683, selected
CAPACITOR				
C270	283-0026-00			0.2uF, Cer, 25V, +80%-20%
RESISTOR				
R271	321-0325-00			23.7K ohm, 0.125W, 1%
SWITCH				
S270[1]	670-1146-02			Pushbutton, COUPLING
	670-1140-02			MODE Circuit Board Assembly
BULBS				
DS274	150-0048-01			Incandescent #683, selected
DS446	150-0048-01			Incandescent #683, selected
RESISTOR				
R273	321-0305-00			14.7K ohm, 0.125W, 1%
SWITCH				
S273[1]	670-1140-02			Pushbutton, MODE

[1]See Mechanical Parts List for replacement parts.
[2]Furnished as a unit with S530.

Ckt. No.	Tektronix Part No.	Serial/Model No. Eff	Disc	Description
	670-1138-04			TIME BASE Circuit Board Assembly
CAPACITORS				
C404	283-0080-00			0.022uF, Cer, 25V, +80%-20%
C407	283-0080-00			0.022uF, Cer, 25V, +80%-20%
C421	283-0080-00			0.022uF, Cer, 25V, +80%-20%
C431	283-0080-00			0.022uF, Cer, 25V, +80%-20%
C434	281-0577-00			14pF, Cer, 500V, 5%
C441	283-0080-00			0.022uF, Cer, 25V, +80%-20%
C446	290-0136-00			2.2uF, Elect., 20V, 20%
C456	290-0136-00			2.2uF, Elect., 20V, 20%
C457	281-0524-00			150pF, Cer, 500V, 20%
C466	283-0080-00			0.022uF, Cer, 25V, +80%-20%
C469	283-0000-00			0.001uF, Cer, 500V, +100%-0%
C523	281-0603-00			39pF, Cer, 500V, 5%
C524	281-0524-00			150pF, Cer, 500V, 20%
C527	281-0523-00			100pF, Cer, 350V, 20%
C530J	281-0093-00			5.5-18pF, Var, Cer
C530K	283-0126-00			82pF, Cer, 1000V, 5%
C530L	281-0091-00			2-8pF, Var, Cer
C530M	281-0657-00			13pF, Cer, 500V, 2%
C532	283-0080-00			0.022uF, Cer, 25V, +80%-20%
C536	290-0136-00			2.2uF, Elect., 20V, 20%
C537	281-0160-00			7-25pF, Var, Cer, 350V
C545	290-0136-00			2.2uF, Elect., 20V, 20%
C551	281-0523-00			100pF, Cer, 350V, 20%
C556	281-0552-00			25pF, Cer, 500V
C561	290-0136-00			2.2uF, Elect., 25V, +80%-20%
C580A	283-0164-00			2.2uF, Cer, 25V, 20%
C580B	283-0191-00			0.022uF, Cer, 50V, 20%
C580D	283-0666-00			890pF, Mica, 100V, 2%
C583	283-0080-00			0.022uF, Cer, 25V, +80%-20%
C592	281-0546-00			330pF, Cer, 500V, 10%
C746	283-0191-00			0.022uF, Cer, 50V, 20%
C748	283-0191-00			0.022uF, Cer, 50V, 20%
C752	281-0501-00			4.7pF, Cer, 500V, ±1pF
C780	281-0508-00			12pF, Cer, 500V, ±0.6pF
C787	281-0549-00			68pF, Cer, 500V, 10%
C788	290-0527-00			15uF, Elect., 20V, 20%
C789	283-0067-00			0.001uF, Cer, 200V, 10%
C799	290-0136-00			2.2uF, Elect., 20V, 20%
C801	290-0420-00			0.68uF, Elect., 75V, 20%
C803	290-0136-00			2.2uF, Elect., 20V, 20%
C805	290-0136-00			2.2uF, Elect., 20V, 20%
C807	290-0136-00			2.2uF, Elect., 20V, 20%
C809	283-0080-00			0.022uF, Cer, 25V, +80%-20%
C813	290-0136-00			2.2uF, Elect., 20V, 20%
C815	290-0136-00			2.2uF, Elect., 20V, 20%

Ckt. No.	Tektronix Part No.	Serial/Model No. Eff	Disc	Description
CAPACITORS (cont)				
C817	290-0136-00			2.2uF, Elect., 20V, 20%
C819	290-0136-00			2.2uF, Elect., 20V, 20%
C821	290-0420-00			0.68uF, Elect., 75V, 20%
DIODES				
CR406	152-0185-00			Silicon, similar to 1N4152
CR412	152-0185-00			Silicon, similar to 1N4152
CR413	152-0185-00			Silicon, similar to 1N4152
CR414	152-0185-00			Silicon, similar to 1N4152
CR419	152-0185-00			Silicon, similar to 1N4152
CR427	152-0185-00			Silicon, similar to 1N4152
CR428	152-0185-00			Silicon, similar to 1N4152
CR431	152-0185-00			Silicon, similar to 1N4152
CR436	152-0185-00			Silicon, similar to 1N4152
CR446	152-0185-00			Silicon, similar to 1N4152
CR448	152-0185-00			Silicon, similar to 1N4152
CR449	152-0185-00			Silicon, similar to 1N4152
CR451	152-0185-00			Silicon, similar to 1N4152
CR452	152-0185-00			Silicon, similar to 1N4152
CR453	152-0185-00			Silicon, similar to 1N4152
CR454	152-0185-00			Silicon, similar to 1N4152
CR459	152-0185-00			Silicon, similar to 1N4152
CR462	152-0185-00			Silicon, similar to 1N4152
CR463	152-0185-00			Silicon, similar to 1N4152
CR464	152-0185-00			Silicon, similar to 1N4152
CR465	152-0185-00			Silicon, similar to 1N4152
CR466	152-0185-00			Silicon, similar to 1N4152
CR467	152-0185-00			Silicon, similar to 1N4152
CR468	152-0185-00			Silicon, similar to 1N4152
CR469	152-0185-00			Silicon, similar to 1N4152
CR523	152-0141-02			Silicon, 1N4152
CR525	152-0185-00			Silicon, similar to 1N4152
CR528	152-0185-00			Silicon, similar to 1N4152
CR529	152-0246-00			Silicon, CD12676 or FD3375
CR548	152-0141-02			Silicon, 1N4152
CR571	152-0185-00			Silicon, similar to 1N4152
CR572	152-0185-00			Silicon, similar to 1N4152
CR574	152-0185-00			Silicon, similar to 1N4152
CR575	152-0185-00			Silicon, similar to 1N4152
CR576	152-0185-00			Silicon, similar to 1N4152
CR580	152-0185-00			Silicon, similar to 1N4152
CR581	152-0185-00			Silicon, similar to 1N4152
CR582	152-0185-00			Silicon, similar to 1N4152
CR592	152-0185-00			Silicon, similar to 1N4152
CR594	152-0185-00			Silicon, similar to 1N4152

Ckt. No.	Tektronix Part No.	Serial/Model No. Eff	Disc	Description
DIODES (cont)				
CR598	152-0185-00			Silicon, similar to 1N4152
CR763	152-0141-02			Silicon, 1N4152
RELAY				
K780	148-0034-00			Armature, dpdt, 15V DC
INDUCTORS				
L593	108-0440-00			8uH
L594	108-0440-00			8uH
TRANSISTORS				
Q406	151-0190-01			Silicon, NPN, 2N3904 or TE3904
Q408	151-0190-01			Silicon, NPN, 2N3904 or TE3904
Q410	151-0188-00			Silicon, PNP, 2N3906
Q416	151-0190-01			Silicon, NPN, 2N3904 or TE3904
Q424	151-0190-01			Silicon, NPN, 2N4904 or TE3904
Q432	151-0188-00			Silicon, PNP, 2N3906
Q436	151-0188-00			Silicon, PNP, 2N3906
Q442	151-0188-00			Silicon, PNP, 2N3906
Q446	151-0207-00			Silicon, NPN, 2N3415
Q454	151-0190-01			Silicon, NPN, 2N3904 or TE3904
Q456	151-0190-01			Silicon, NPN, 2N3904 or TE3904
Q468	151-0190-01			Silicon, NPN, 2N3904 or TE3904
Q524	151-0188-00			Silicon, PNP, 2N3906
Q526	151-0289-00			Silicon, PNP, MM999
Q532A,B	151-1036-00			Silicon, FET, FD1551, dual
Q534	151-0188-00			Silicon, PNP, 2N3906
Q537	151-0190-01			Silicon, NPN, 2N3904 or TE3904
Q546	151-0220-00			Silicon, PNP, 2N4122
Q554	151-0190-01			Silicon, NPN, 2N3904 or TE3904
Q564	151-0190-01			Silicon, NPN, 2N3904 or TE3904
Q566	151-0190-01			Silicon, NPN, 2N3904 or TE3904
Q582	151-0188-00			Silicon, PNP, 2N3906
Q592A,B	151-0232-00			Silicon, NPN, 2N2919, dual
Q594	151-0333-00			Silicon, NPN, selected from MPS918
Q784	151-0325-00			Silicon, PNP, 2N4258
Q794	151-0325-00			Silicon, PNP, 2N4258
RESISTORS				
R404	315-0151-00			150 ohm, 0.25W, 5%
R406	315-0103-00			10K ohm, 0.25W, 5%
R407	315-0151-00			150 ohm, 0.25W, 5%
R408	321-0174-00			634 ohm, 0.125W, 1%
R409	321-0252-00			4.12K ohm, 0.125W, 1%
R410	315-0101-00			100 ohm, 0.25W, 5%
R411	321-0277-00			7.5K ohm, 0.125W, 1%
R412	315-0153-00			15K ohm, 0.25W, 5%

Ckt. No.	Tektronix Part No.	Serial/Model No. Eff	Disc	Description
RESISTORS (cont)				
R416	321-0315-00			18.7K ohm, 0.125W, 1%
R418	315-0202-00			2K ohm, 0.25W, 5%
R419	315-0221-00			220 ohm, 0.25W, 5%
R421	315-0431-00			430 ohm, 0.25W, 5%
R422	315-0112-00			1.1K ohm, 0.25W, 5%
R423	315-0220-00			22 ohm, 0.25W, 5%
R424	315-0302-00			3K ohm, 0.25W, 5%
R426	315-0132-00			1.3K ohm, 0.25W, 5%
R427	315-0561-00			560 ohm, 0.25W, 5%
R428	321-0300-00			13K ohm, 0.125W, 1%
R431	315-0470-00			47 ohm, 0.25W, 5%
R432	321-0136-00			255 ohm, 0.125W, 1%
R433	321-0129-00			215 ohm, 0.125W, 1%
R434	321-0265-00			5.62K ohm, 0.125W, 1%
R435	321-0244-00			3.4K ohm, 0.125W, 1%
R436	321-0167-00			536 ohm, 0.125W, 1%
R438	315-0102-00			1K ohm, 0.25W, 5%
R441	301-0470-00			47 ohm, 0.50W, 5%
R444	315-0102-00			1K ohm, 0.25W, 5%
R448	321-0277-00			7.5K ohm, 0.125W, 1%
R449	315-0472-00			4.7K ohm, 0.25W, 5%
R451	315-0223-00			22K ohm, 0.25W, 5%
R452	321-0306-00			15K ohm, 0.125W, 1%
R454	315-0472-00			4.7K ohm, 0.25W, 5%
R455	315-0682-00			6.8K ohm, 0.25W, 5%
R456	315-0153-00			15K ohm, 0.25W, 5%
R458	315-0103-00			10K ohm, 0.25W, 5%
R459	315-0123-00			12K ohm, 0.25W, 5%
R462	315-0752-00			7.5K ohm, 0.25W, 5%
R464	321-0271-00			6.49K ohm, 0.125W, 1%
R465	321-0234-00			2.67K ohm, 0.125W, 1%
R466	321-0277-00			7.5K ohm, 0.125W, 1%
R468	321-0306-00			15K ohm, 0.125W, 1%
R469	321-0209-00			1.47K ohm, 0.125W, 1%
R521	315-0101-00			100 ohm, 0.25W, 5%
R522	315-0203-00			20K ohm, 0.25W, 5%
R523	321-0266-00			5.76K ohm, 0.125W, 1%
R524	315-0222-00			2.2K ohm, 0.25W, 5%
R525	321-0289-00			10K ohm, 0.125W, 1%
R526	321-0269-00			6.19K ohm, 0.125W, 1%
R527	321-0193-00			1K ohm, 0.125W, 1%
R532	315-0122-00			1.2K ohm, 0.25W, 5%
R533	321-0219-00			1.87K ohm, 0.125W, 1%
R534	322-0281-00			8.25K ohm, 0.25W, 1%
R536	315-0220-00			22 ohm, 0.25W, 5%

Ckt. No.	Tektronix Part No.	Serial/Model No. Eff	Disc	Description
RESISTORS (cont)				
R537	316-0681-00			680 ohm, 0.25W, 10%
R538	315-0330-00			33 ohm, 0.25W, 5%
R539	315-0101-00			100 ohm, 0.25W, 5%
R540	315-0622-00			6.2K ohm, 0.25W, 5%
R541	315-0131-00			130 ohm, 0.25W, 5%
R542	321-0260-00			4.99K ohm, 0.125W, 1%
R543	Selected			
R544	321-0231-00			2.49K ohm, 0.125W, 1%
R545	315-0470-00			47 ohm, 0.25W, 5%
R546	301-0102-00			1K ohm, 0.50W, 5%
R547	315-0183-00			18K ohm, 0.25W, 5%
R548	301-0561-00			560 ohm, 0.50W, 5%
R549	315-0472-00			4.7K ohm, 0.25W, 5%
R551	321-0211-00			1.54K ohm, 0.125W, 1%
R552	321-0231-00			2.49K ohm, 0.125W, 1%
R554	321-0178-00			698 ohm, 0.125W, 1%
R556	321-0260-00			4.99K ohm, 0.125W, 1%
R557	321-0239-00			3.01K ohm, 0.125W, 1%
R558	321-0193-00			1K ohm, 0.125W, 1%
R561	315-0820-00			82K ohm, 0.25W, 5%
R564	321-0207-00			1.4K ohm, 0.125W, 1%
R565	321-0189-00			909 ohm, 0.125W, 1%
R566	315-0101-00			100 ohm, 0.25W, 5%
R567	301-0162-00			1.6K ohm, 0.50W, 5%
R568	315-0470-00			47 ohm, 0.25W, 5%
R573	321-0295-00			11.5K ohm, 0.125W, 1%
R580C	323-0222-00			2K ohm, 0.50W, 1%
R581	315-0223-00			22K ohm, 0.25W, 5%
R582	323-0289-00			10K ohm, 0.50W, 1%
R583	315-0104-00			100K ohm, 0.25W, 5%
R592	315-0101-00			100 ohm, 0.25W, 5%
R594	322-0273-00			6.81K ohm, 0.25W, 1%
R596	315-0101-00			100 ohm, 0.25W, 5%
R598	322-0310-00			16.5K ohm, 0.25W, 1%
R599	322-0297-00			12.1K ohm, 0.25W, 1%
R745	315-0220-00			22 ohm, 0.25W, 5%
R746	321-0260-00			4.99K ohm, 0.125W, 0.50%
R747	315-0220-00			22 ohm, 0.25W, 5%
R748	315-0114-00			100 ohm, 0.25W, 5%
R749	321-0285-00			9.09K ohm, 0.125W, 1%
R750	321-0289-00			10K ohm, 0.125W, 1%
R751	315-0101-00			100 ohm, 0.25W, 5%
R752	321-0110-00			137 ohm, 0.125W, 1%
R755	321-0279-00			7.87K ohm, 0.125W, 1%
R765	315-0102-00			1K ohm, 0.25W, 5%

Ckt. No.	Tektronix Part No.	Serial/Model No. Eff	Disc	Description
RESISTORS (cont)				
R766	315-0101-00			100 ohm, 0.25W, 5%
R767	321-0222-00			2K ohm, 0.125W, 1%
R768	315-0472-00			4.7K ohm, 0.25W, 5%
R775	321-0152-00			374 ohm, 0.125W, 1%
R776	321-0204-00			1.3K ohm, 0.125W, 1%
R777	321-0191-00			953 ohm, 0.125W, 1%
R780	315-0201-00			200 ohm, 0.25W, 5%
R781	323-0272-00			6.65K ohm, 0.50W, 1%
R782	321-0735-07			1.001K ohm, 0.125W, 0.1%
R783	315-0752-00			7.5K ohm, 0.25W, 5%
R784	321-0228-00			2.32K ohm, 0.125W, 1%
R785	311-0597-00			50 ohm, Var
R786	321-0088-09			80.6 ohm, 0.125W, 1%
R787	315-0472-00			4.7K ohm, 0.25W, 5%
R788	315-0472-00			4.7K ohm, 0.25W, 5%
R789	315-0472-00			4.7K ohm, 0.25W, 5%
R790	315-0433-00			43K ohm, 0.25W, 5%
R791	323-0272-00			6.65K ohm, 0.50W, 1%
R793	315-0752-00			7.5K ohm, 0.25W, 5%
R794	321-0228-00			2.32K ohm, 0.125W, 1%
R795	311-0541-00			20K ohm, Var
R796	321-0289-00			10K ohm, 0.125W, 1%
R797	321-0289-00			10K ohm, 0.125W, 1%
R798	315-0510-00			51 ohm, 0.25W, 5%
R799	315-0101-00			100 ohm, 0.25W, 5%
R801	315-0510-00			51 ohm, 0.25W, 5%
R803	315-0470-00			47 ohm, 0.25W, 5%
R804	315-0623-00			62K ohm, 0.25W, 5%
R805	315-0470-00			47 ohm, 0.25W, 5%
R807	315-0101-00			100 ohm, 0.25W, 5%
R809	315-0101-00			100 ohm, 0.25W, 5%
R815	315-0470-00			47 ohm, 0.25W, 5%
R817	315-0910-00			91 ohm, 0.25W, 5%
R819	315-0101-00			100 ohm, 0.25W, 5%
R821	315-0510-00			51 ohm, 0.25W, 5%
INTEGRATED CIRCUIT				
U752	156-0077-00			Single operational amplifier, LM301A
DIODES, ZENER				
VR573	152-0279-00			Zener, 1N751A, 400mW, 5.1V, 5%
VR576	152-0326-00			Zener, 1N755A, 400mW, 7.5V, 5%

Ckt. No.	Tektronix Part No.	Serial/Model No. Eff	Disc	Description
	670-1145-01	SOURCE Circuit Board Assembly		
BULB DS280	150-0048-01			Incandescent #683, selected
SWITCH S280[1]	670-1145-01			Pushbutton, SOURCE
	670-1107-02	MAGNIFIER Circuit Board Assembly		
BULB DS780	150-0048-01			Incandescent #683, selected
SWITCH S780[1]	670-1107-02			Pushbutton, MAGNIFIER

[1]See Mechanical Parts List for replacement parts.

SECTION 7

DIAGRAMS AND MECHANICAL PARTS ILLUSTRATIONS

Symbols and Reference Designators

Electrical components shown on the diagrams are in the following units unless noted otherwise:

Capacitors = Values one or greater are in picofarads (pF).
Values less than one are in microfarads (μF).
Resistors = Ohms (Ω)

Symbols used on the diagrams are based on USA Standard Y32.2-1967.

Logic symbology is based on MIL-STD-806B in terms of positive logic. Logic symbols depict the logic function performed and may differ from the manufacturer's data.

The following special symbols are used on the diagrams:

External Screwdriver adjustment.

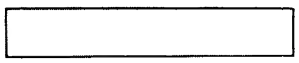

External control or connector.

Clockwise control rotation in direction of arrow.

Refer to diagram number indicated in diamond.

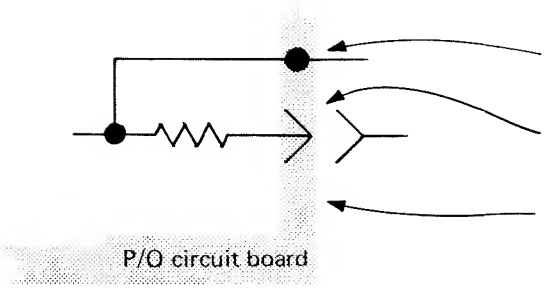

Connection soldered to circuit board.

Connection made to circuit board with interconnecting pin.

Blue tint encloses components located on circuit board.

The following prefix letters are used as reference designators to identify components or assemblies on the diagrams.

A	Assembly, separable or repairable (circuit board, etc.)
AT	Attenuator, fixed or variable
B	Motor
BT	Battery
C	Capacitor, fixed or variable
CR	Diode, signal or rectifier
DL	Delay line
DS	Indicating device (lamp)
F	Fuse
FL	Filter
H	Heat dissipating device (heat sink, heat radiator, etc.)
HR	Heater
J	Connector, stationary portion
K	Relay
L	Inductor, fixed or variable
LR	Inductor/resistor combination
M	Meter
Q	Transistor or silicon-controlled rectifier
P	Connector, movable portion
R	Resistor, fixed or variable
RT	Thermistor
S	Switch
T	Transformer
TP	Test point
U	Assembly, inseparable or non-repairable (integrated circuit, etc.)
V	Electron tube
VR	Voltage regulator (zener diode, etc.)
Y	Crystal

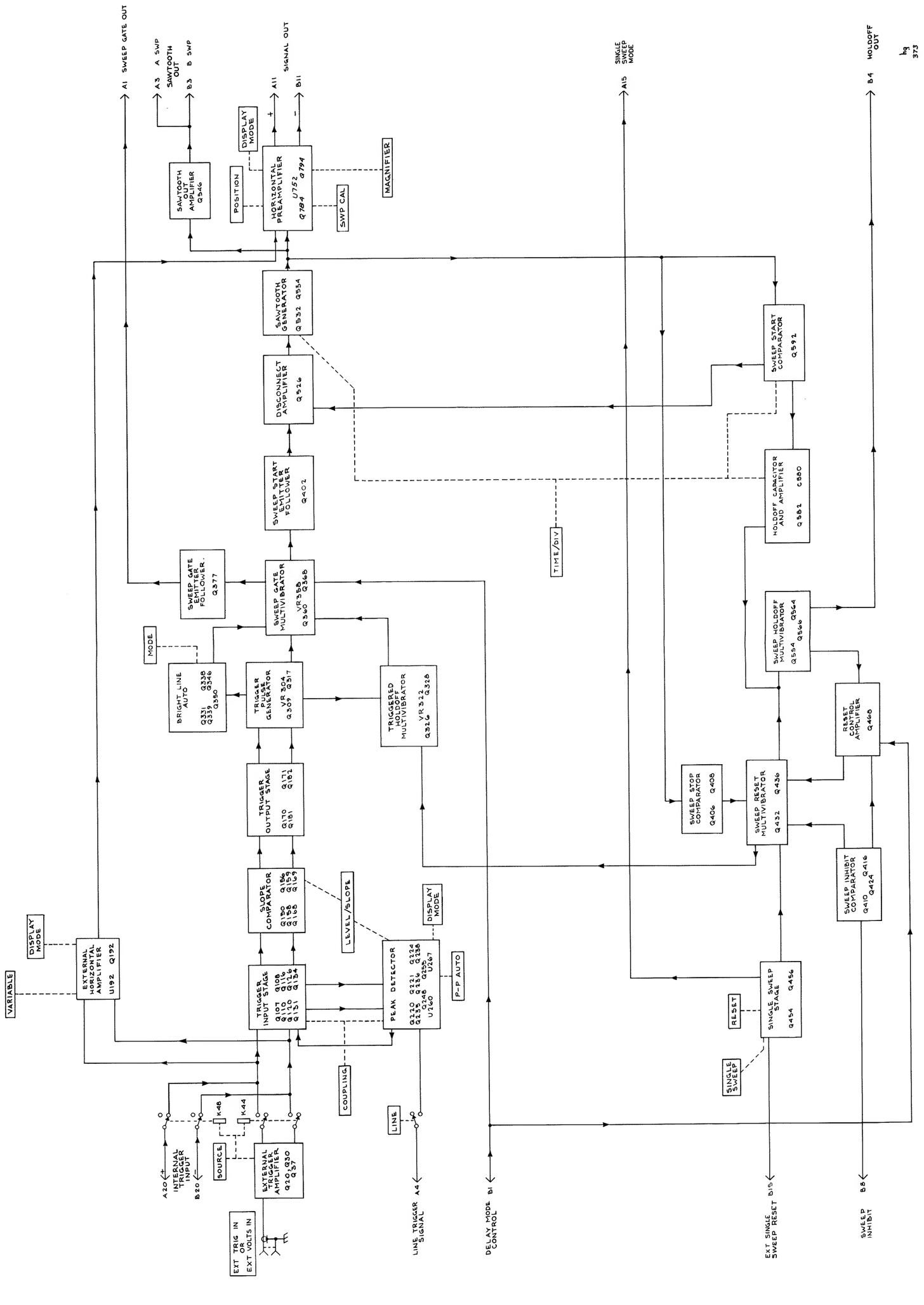
BLOCK DIAGRAM
SN B 205000-UP
7B70 PLUG-IN
A1 SWEEP GATE OUT
A3 A SWP SAWTOOTH OUT
B3 B SWP
A11 SIGNAL OUT
B11
A15 SINGLE SWEEP MODE
B4 HOLDOFF OUT
DISPLAY MODE
POSITION
MAGNIFIER
SWP CAL
SAWTOOTH OUTPUT AMPLIFIER Q546
HORIZONTAL PREAMPLIFIER U752 Q784 Q794
SAWTOOTH GENERATOR Q532 Q554
DISCONNECT AMPLIFIER Q526
SWEEP START EMITTER FOLLOWER Q402
SWEEP START COMPARATOR Q592
HOLDOFF CAPACITOR AND AMPLIFIER Q582 C580
SWEEP GATE EMITTER FOLLOWER Q377
SWEEP GATE MULTIVIBRATOR VR358 Q340 Q366
TIME/DIV
SWEEP HOLDOFF MULTIVIBRATOR Q554 Q544
MODE
BRIGHT LINE AUTO Q331 Q338 Q339 Q346 Q350
TRIGGER GENERATOR VR 304 Q307 Q317
TRIGGERED SWEEP MULTIVIBRATOR VR 322 Q316 Q328
RESET CONTROL AMPLIFIER Q460
TRIGGER OUTPUT STAGE Q170 Q171 Q161 Q162
SWEEP STOP COMPARATOR Q406 Q408
SWEEP RESET MULTIVIBRATOR Q432 Q436
SLOPE COMPARATOR Q158 Q159 Q168 Q169
LEVEL/SLOPE
DISPLAY MODE
VARIABLE
EXTERNAL HORIZONTAL AMPLIFIER U192 Q192
TRIGGER INPUT STAGE Q107 Q108 Q110 Q116 Q131 Q134
PEAK DETECTOR Q220 Q221 Q238 Q248 Q254 Q348 U260 U267
P-P AUTO
SWEEP INHIBIT COMPARATOR Q410 Q416 Q424
SINGLE SWEEP STAGE Q454 Q454
RESET
SINGLE SWEEP
COUPLING
LINE
K48
K44
SOURCE
EXTERNAL TRIGGER AMPLIFIER Q20, Q30 Q37
A20 INTERNAL TRIGGER INPUT
B20
EXT TRIG IN OR EXT VOLTS IN
LINE TRIGGER SIGNAL A4
DELAY MODE CONTROL B1
EXT SINGLE SWEEP RESET B19
SWEEP INHIBIT B6
hg 373
A

VOLTAGE AND WAVEFORM TEST CONDITIONS

Typical voltage measurements were obtained under the following conditions unless noted otherwise on the individual diagrams.

Oscilloscope

Vertical Mode	Left
Horizontal Mode	A
A Intensity	Optimum

7B71 (A Horiz Plug-In)

Level/Slope	Centered on positive slope
Triggering	
Mode	P-P Auto
Coupling	AC
Source	Ext
Magnifier	X1
Time/Div	1 mS
Variable Time/Div	Cal In
B Delay Mode	Independent
Position	Centered

7A16A (Left Vertical Plug-In)

Polarity	+UP
Bandwidth	20 MHz
Volts/Div	1 V
Coupling	AC
Position	Centered

7B70

LEVEL/SLOPE	Centered on positive slope
TRIGGERING	
MODE	P-P AUTO
COUPLING	AC
SOURCE	EXT
MAGNIFIER	X1
TIME/DIV	1 mS
VARIABLE TIME/DIV	CAL IN
DISPLAY MODE	TIME BASE
POSITION	Centered
AMPLIFIER VARIABLE	Fully counterclockwise

The following control settings and connections were changed to obtain waveform photographs.

7B71

Time/Div	As shown on waveforms

7A16A

Volts/Div	As shown on waveforms

Signal input: A one volt, one kilohertz sine-wave applied to both the 7B70 and 7B71 EXT TRIG IN connector.

All voltages given on the diagrams are in volts. Voltages taken using a Fairchild Model 7050 non-loading digital multimeter. Waveforms shown are actual waveform photographs taken with a Tektronix Oscilloscope Camera System and Projected Graticule. Voltages and waveforms on the diagrams (shown in blue) are not absolute and may vary between instruments because of differing component tolerances, internal calibration or front panel control settings. Readouts are simulated in larger-than-normal type.

VOLTAGE & WAVEFORM CONDITIONS

NOTE

Vertical deflection factor shown on waveforms does not include attenuation factor of the 10X Probe.

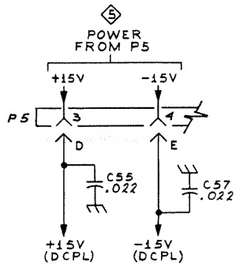

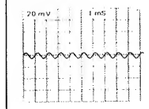

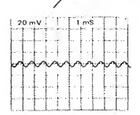

EXT TRIG IN OR EXT VOLTS IN

NOTES:
1. SEE PARTS LIST FOR SEMICONDUCTOR TYPES.
2. * HEAT SINKED

7B70 PLUG-IN

TRIGGER INPUT ◇1 WLB 273
SN B205000 - UP

TRIGGER INPUT ◇1

NOTE

Vertical deflection factor shown on waveforms does not include attenuation factor of the 10X Probe.

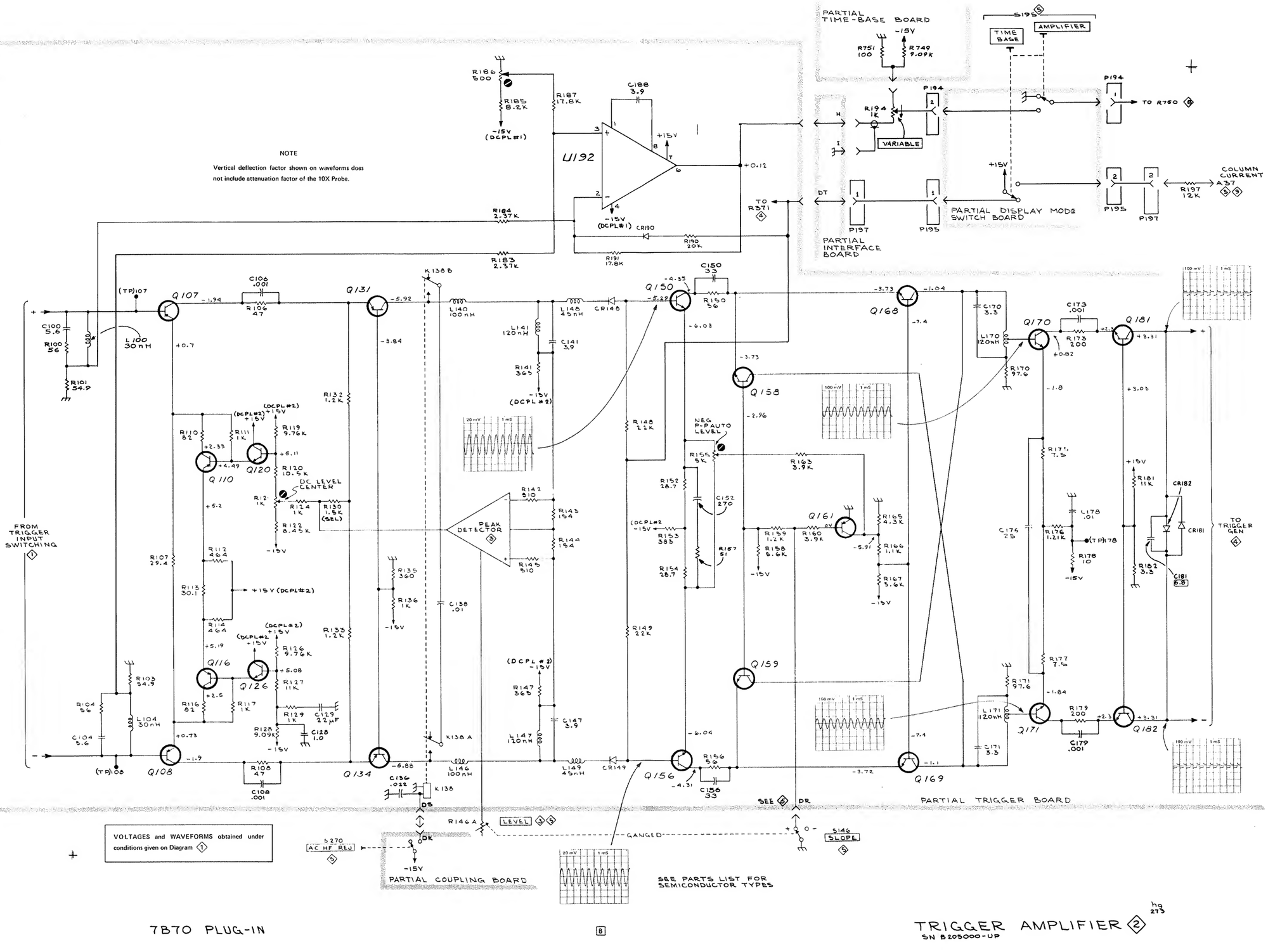

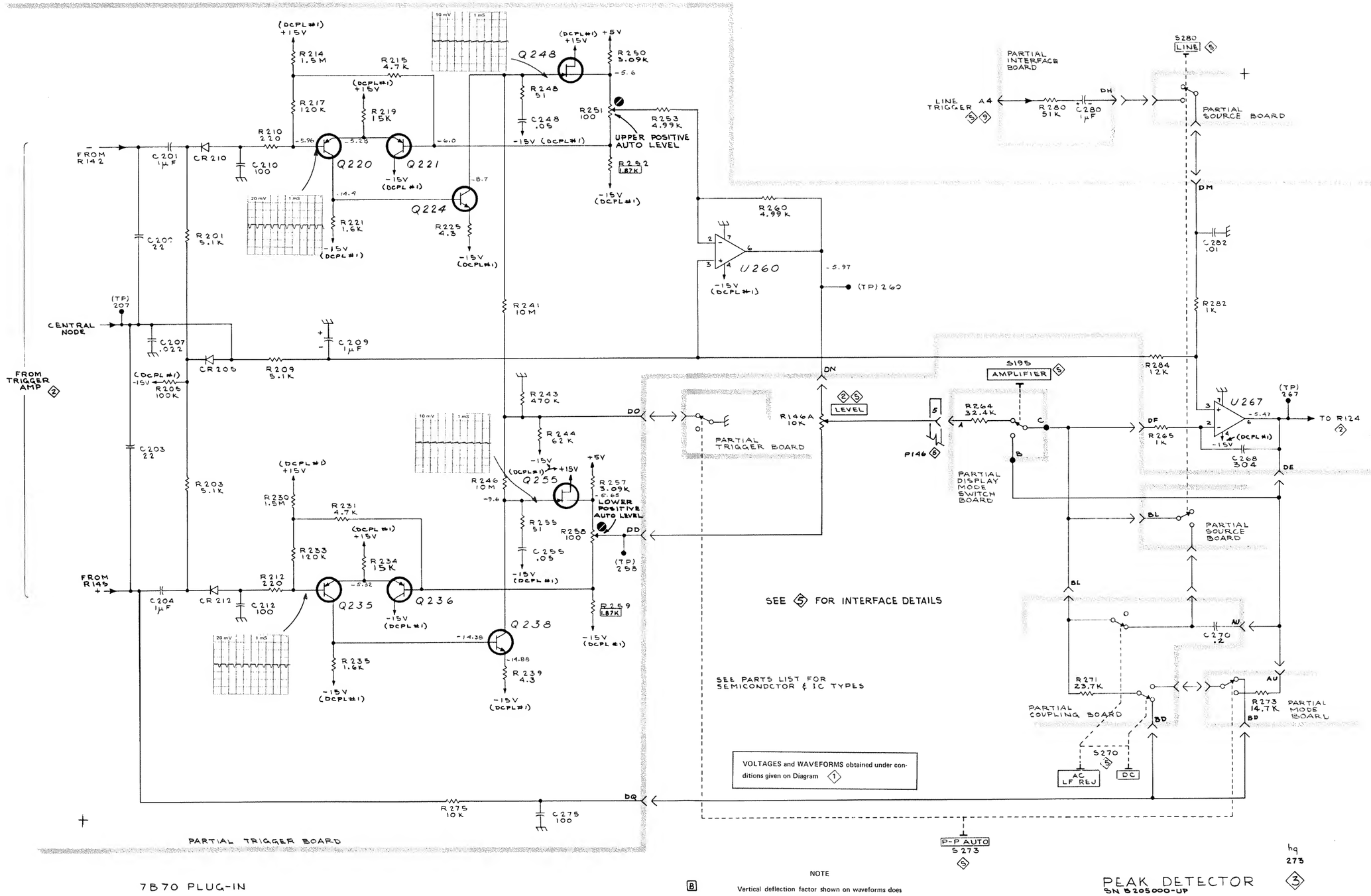
(DCPL#1) +15V
R214 1.5M
R215 4.7K
R217 120K
R219 15K
R210 220
C210 100
C201 1μF
CR210
FROM R142
Q220
Q221
Q224
R221 1.6K
R225 4.3
R248 51
C248 .05
Q248
R250 3.09K
R251 100
R253 4.99K
UPPER POSITIVE AUTO LEVEL
R252 1.87K
R260 4.99K
U260
(TP) 260
C202 22
R201 5.1K
(TP) 207
CENTRAL NODE
C207 .022
C209 1μF
CR205
R209 5.1K
R241 10M
R243 470K
R244 62K
R246 10M
Q255
R257 3.09K
LOWER POSITIVE AUTO LEVEL
R255 51
R258 100
C255 .05
(TP) 258
R259 1.87K
FROM TRIGGER AMP
R205 100K
C203 22
R203 5.1K
R230 1.5M
R231 4.7K
R233 120K
R234 15K
R212 220
C212 100
C204 1μF
CR 212
Q235
Q236
Q238
R235 1.6K
R239 4.3
FROM R145
R275 10K
C275 100
PARTIAL TRIGGER BOARD
DO
DN
DP
DQ
PARTIAL TRIGGER BOARD
R146A 10K
LEVEL
P146
PARTIAL DISPLAY MODE SWITCH BOARD
R264 32.4K
S195 AMPLIFIER
R265 1K
U267
(TP) 267
TO R124
C268 304
DE
PARTIAL INTERFACE BOARD
LINE TRIGGER
A4
R280 51K
C280 1μF
S280 LINE
PARTIAL SOURCE BOARD
DM
C282 .01
R282 1K
R284 12K
BL
C270 .2
AU
R271 23.7K
R273 14.7K
PARTIAL COUPLING BOARD
PARTIAL MODE BOARD
S270
AC LF REJ
DC
P-P AUTO S273
SEE FOR INTERFACE DETAILS
SEE PARTS LIST FOR SEMICONDCTOR & IC TYPES
VOLTAGES and WAVEFORMS obtained under conditions given on Diagram 1
NOTE
Vertical deflection factor shown on waveforms does not include attenuation factor of the 10X Probe.
7B70 PLUG-IN
PEAK DETECTOR
SN B205000-UP
hq 273
PEAK DETECTOR 3

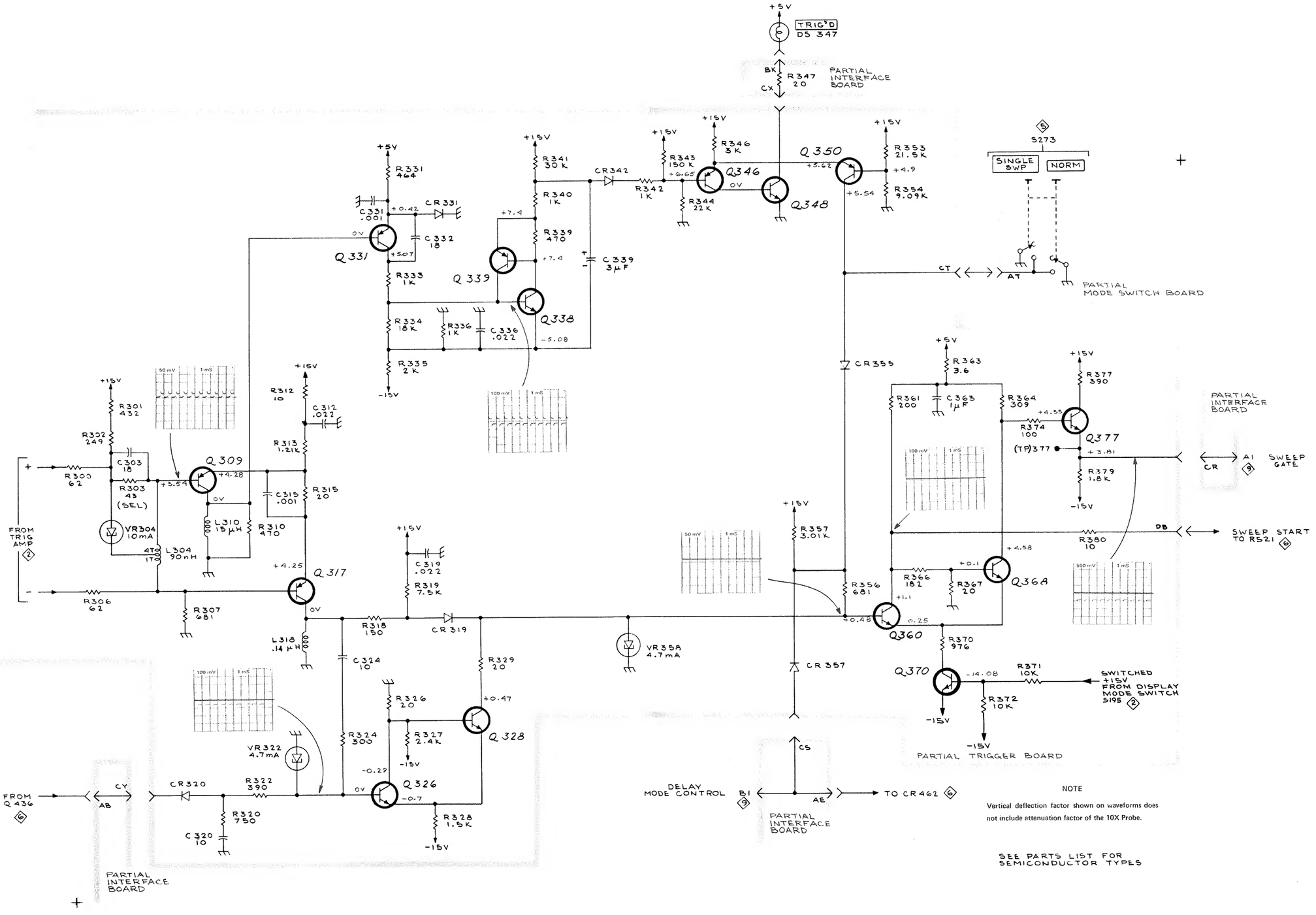

NOTE

Vertical deflection factor shown on waveforms does not include attenuation factor of the 10X Probe.

SEE PARTS LIST FOR SEMICONDUCTOR TYPES

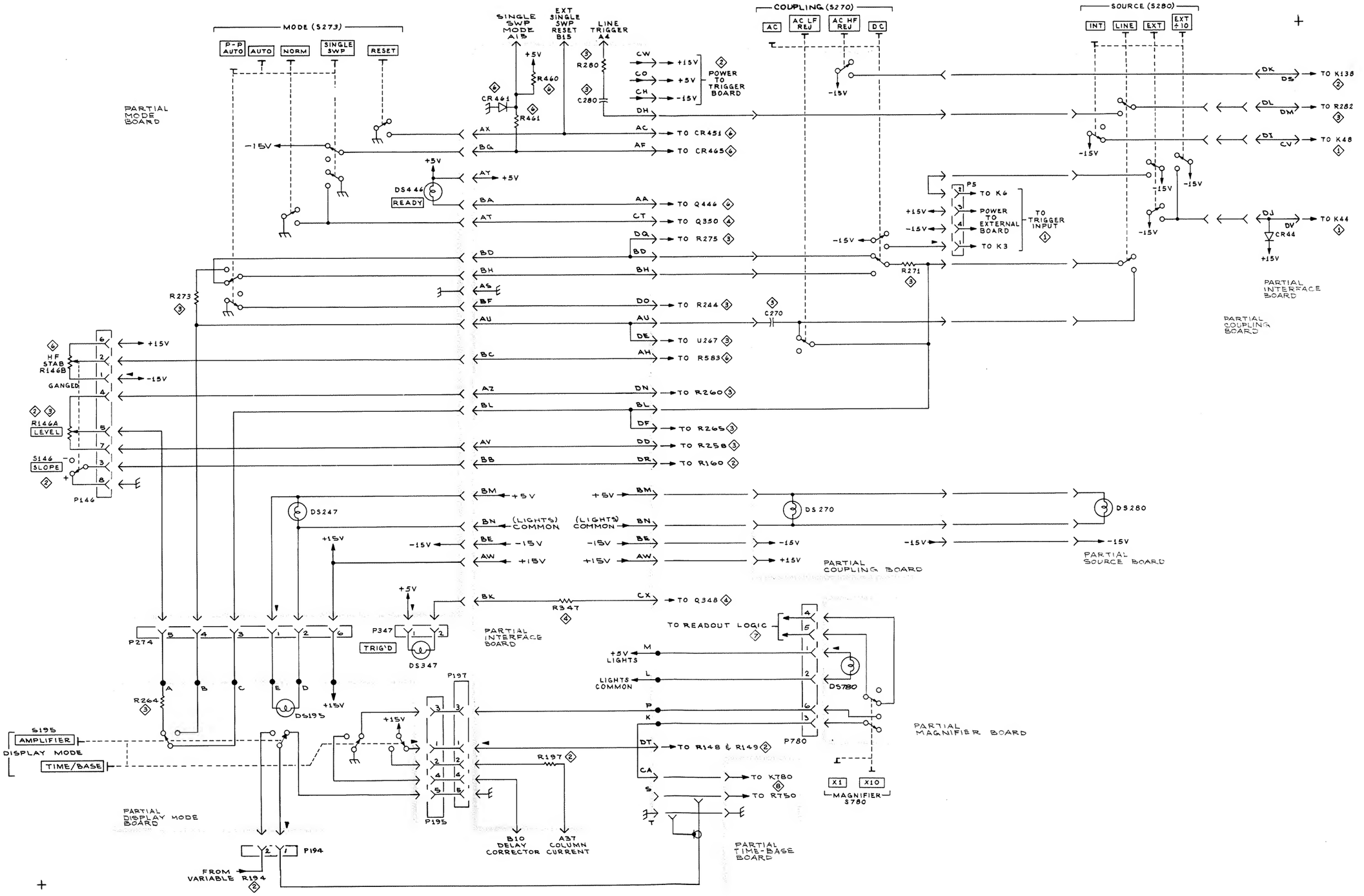
MODE (S273)
P-P AUTO
AUTO
NORM
SINGLE SWP
RESET
PARTIAL MODE BOARD
SINGLE SWP MODE A13
EXT SINGLE SWP RESET B15
LINE TRIGGER A4
R280
C280
CW
CO
CH
DH
+15V
+5V
-15V
POWER TO TRIGGER BOARD
R460
CR461
R461
AX
BQ
AC
AF
TO CR451
TO CR465
DS446
READY
AT
BA
AT
AA
CT
TO Q446
TO Q350
DQ
TO R275
BD
BH
AS
BF
AU
DO
TO R244
DE
TO U267
BC
AH
TO R583
AZ
BL
DN
TO R260
DF
TO R265
AV
BB
DD
TO R258
DR
TO R160
R273
HF STAB R146B
GANGED
R146A LEVEL
S146 SLOPE
P146
DS247
BM
BN
BE
AW
(LIGHTS) COMMON
P274
P347
TRIG'D
DS347
PARTIAL INTERFACE BOARD
BK
R347
CX
TO Q348
R264
DS193
P197
P195
S195
AMPLIFIER
DISPLAY MODE
TIME/BASE
PARTIAL DISPLAY MODE BOARD
R197
B10 DELAY CORRECTOR
A37 COLUMN CURRENT
FROM VARIABLE R194
P194
COUPLING (S270)
AC
AC LF REJ
AC HF REJ
DC
C270
R271
PARTIAL COUPLING BOARD
P5
TO K6
POWER TO EXTERNAL BOARD
TO K3
TO TRIGGER INPUT
SOURCE (S280)
INT
LINE
EXT
EXT ÷10
DK
DS
TO K138
DL
DM
TO R282
DI
CV
TO K48
DJ
DV
CR44
TO K44
PARTIAL INTERFACE BOARD
PARTIAL SOURCE BOARD
DS270
DS280
TO READOUT LOGIC
+5V LIGHTS
LIGHTS COMMON
DS780
P780
PARTIAL MAGNIFIER BOARD
DT
TO R148 & R149
CA
TO K780
S
TO R750
MAGNIFIER S780
X1
X10
PARTIAL TIME-BASE BOARD

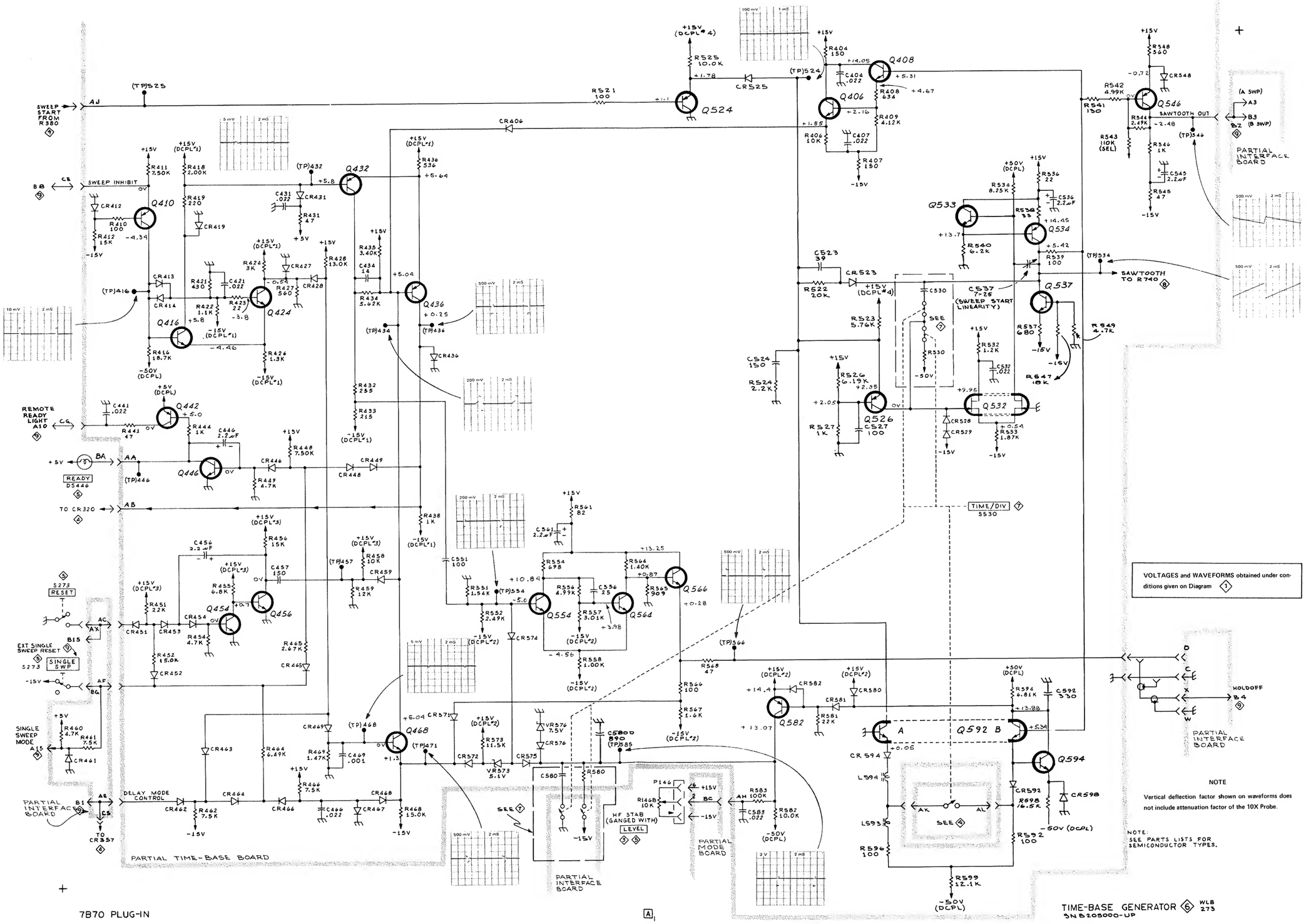

VOLTAGES and WAVEFORMS obtained under conditions given on Diagram 1

NOTE

Vertical deflection factor shown on waveforms does not include attenuation factor of the 10X Probe.

NOTE:
SEE PARTS LISTS FOR SEMICONDUCTOR TYPES.

TIME-BASE GENERATOR 6 WLB 273
SN B205000-UP

REFERENCE DIAGRAMS
- (6) TIME-BASE GENERATOR
- (8) HORIZONTAL PREAMP
- (9) DECOUPLING & OUTPUT CONNECTOR

TO COLLECTOR Q582 (6)
TO CR592 (6)
TO CR594 (6)
TO COLLECTOR Q534 (6)
TO GATE Q532 (6)

C580D 690
C580B .022
R580C 2K
C580A 2.2μF
C530E 0.1
C530F .01
C530H .001
C530J 5.5-18
C530K 82
C530L 2-8
C530M 13

PARTIAL TIME-BASE BOARD

AR AQ AO AK AL AM BQ BR BT BV BW AP BX

-15V (DCPL #3) (9)
BP

C530B 1μF
R530R 22
C530A 10μF
C530R .001
C530P 100
R530P 33
R530S 39
C530S 98

R530A 8.06M
R530B 6.19M
R530C 4.75M
R530D 4.75M
R530F 1.425M
R530H 475K
R530J 475K
R530K 118.7K
R530N 71.25K
R530L 47.5K

CR531
CAL
-50V
R530M 5.9K
R531 10K
VARIABLE (TIME/DIV)

PARTIAL INTERFACE BOARD

FROM R197 (2)
S531 CAL IN

COLUMN CURRENT → A37
ROW CURRENT → B37

PARTIAL MAGNIFIER BOARD
CAL
CR702
R702 13K
P780 4
0 X1
5 P780

R723 150K
R729 150K
R706 75K
R713 75K
R701 150K
R728 37.4K
R724 49.9K
R727 30.1K
R715 150K
R712 150K
R711 75K

R722 150K
R721 75K
R704 150K
R705 37.4K

10 → A29
ROW 2 → 1 → B33
>,< → 3 → B32
1,2,5 → 4 → A32
m,μ,n → 8 → A30
S → 9 → B29
A7

8 9 10 12 11 13 14 15 16 17 25 29 18 19 20 21 22 23 24 26 27 28 | 2 6 5 3 4 7

S: 5 2 1 .5 .2 .1 50 20 10 5 2 1 .5 .2 .1 .05 .02
mS: 50 20 10 5 2 1 .5 .2 .1 50 20 10 5 2 1 .5 .2 .1 .05 .02
μS: 50 20 10 5 2 1 .5 .2 .1 .05 .02

8 9 HOLDOFF CHARACTERS
11 13 14 15 16 17 25 29 TIMING CAPACITORS
18 19 20 21 22 23 24 26 27 28 TIMING RESISTORS
TIME/DIV S530
1 2 6 5 3 4 7 READOUT

hq 273

7B70 PLUG-IN

TIMING SWITCH
SN B205000-UP

TIMING SWITCH 7

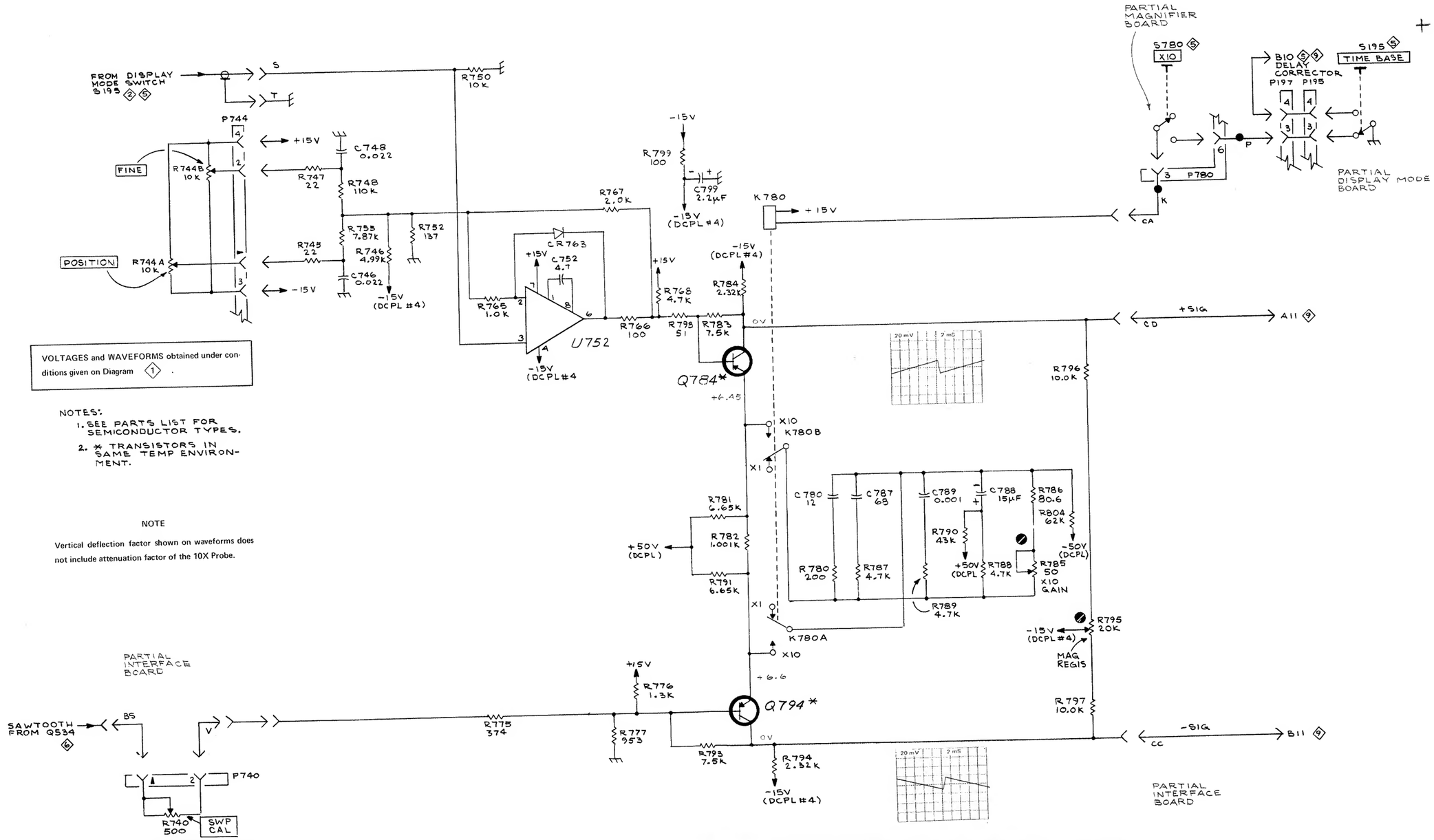

VOLTAGES and WAVEFORMS obtained under conditions given on Diagram 1 .

NOTES:
1. SEE PARTS LIST FOR SEMICONDUCTOR TYPES.
2. * TRANSISTORS IN SAME TEMP ENVIRONMENT.

NOTE

Vertical deflection factor shown on waveforms does not include attenuation factor of the 10X Probe.

7B70 PLUG-IN

A

HORIZONTAL PREAMP 8

SN B205000-UP

hq 273

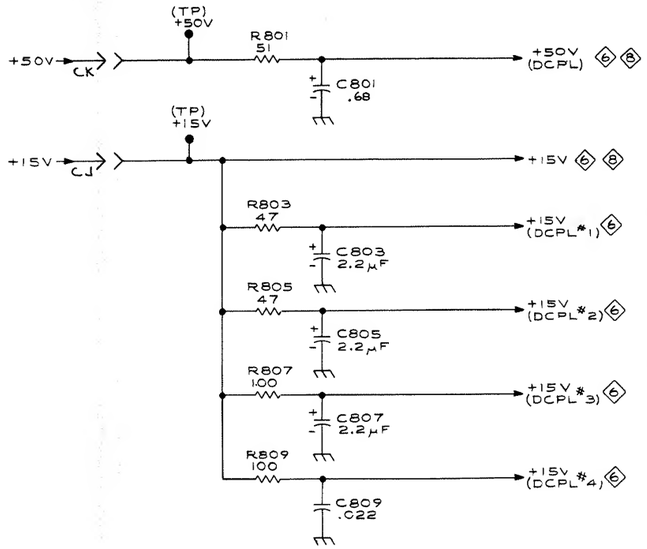

PARTIAL TIME-BASE BOARD

PARTIAL
INTERFACE
BOARD

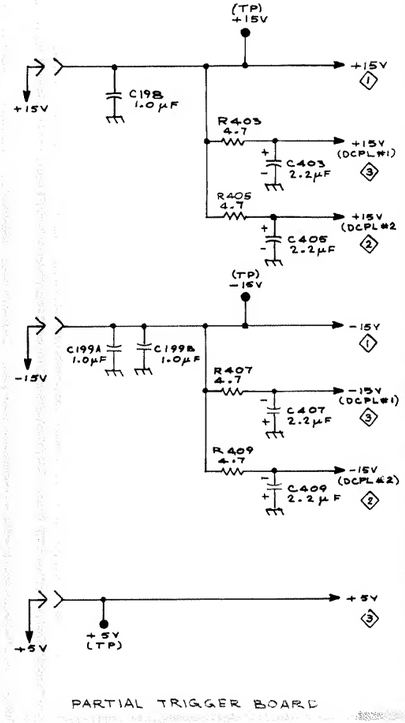

PARTIAL TRIGGER BOARD

PARTIAL
INTERFACE
BOARD

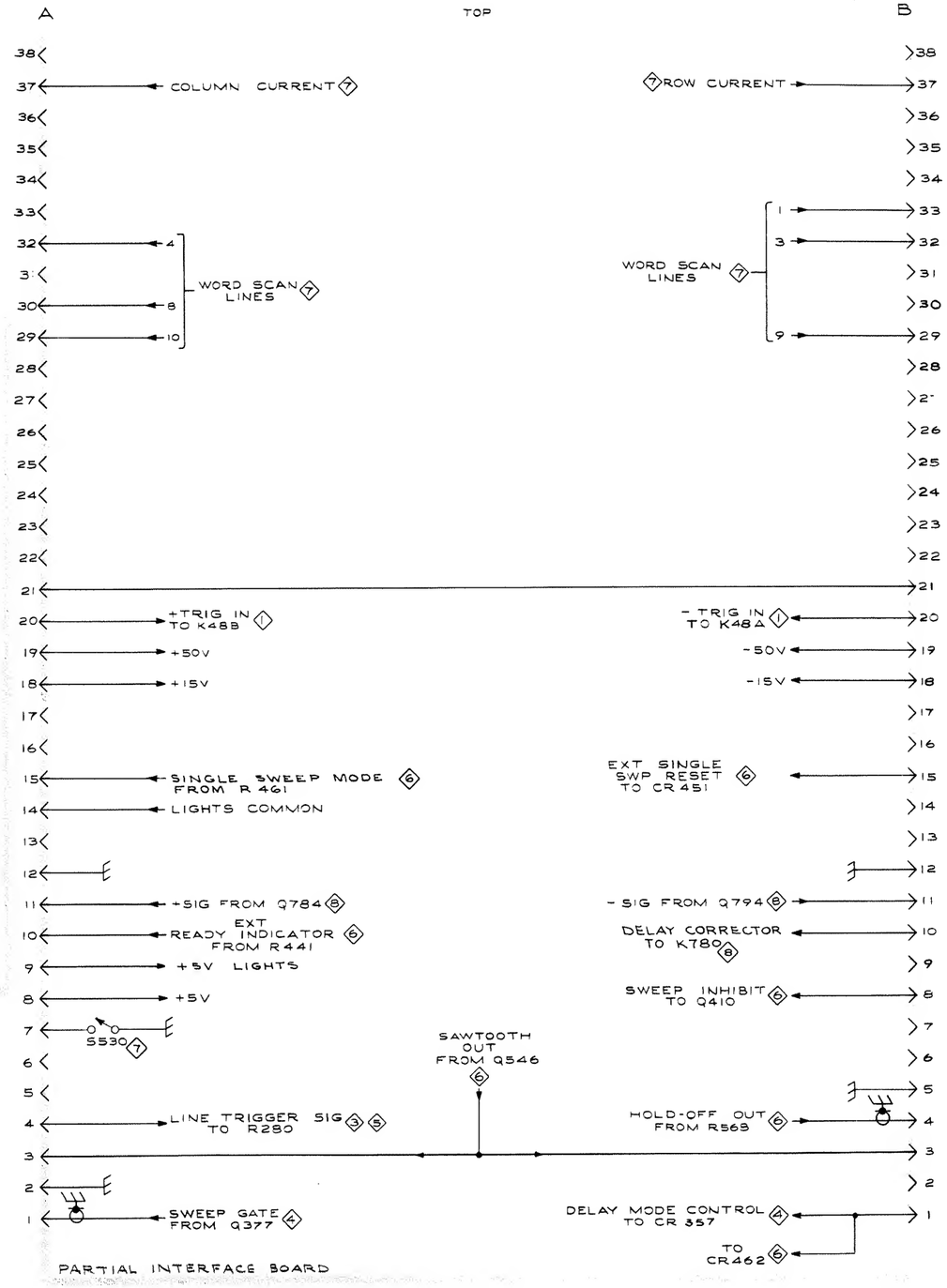

PARTIAL INTERFACE BOARD

VRS
273

MECHANICAL PARTS LIST

Replacement parts should be ordered from the Tektronix Field Office or Representative in your area. Changes to Tektronix products give you the benefit of improved circuits and components. Please include the instrument type number and serial number with each order for parts or service.

ABBREVIATIONS

BHB	binding head brass	h	height or high	OHB	oval head brass
BHS	binding head steel	hex.	hexagonal	OHS	oval head steel
CRT	cathode-ray tube	HHB	hex head brass	PHB	pan head brass
csk	countersunk	HHS	hex head steel	PHS	pan head steel
DE	double end	HSB	hex socket brass	RHS	round head steel
FHB	flat head brass	HSS	hex socket steel	SE	single end
FHS	flat head steel	ID	inside diameter	THB	truss head brass
Fil HB	fillister head brass	lg	length or long	THS	truss head steel
Fil HS	fillister head steel	OD	outside diameter	w	wide or width

FIGURE 1 EXPLODED

Fig. & Index No.	Tektronix Part No.	Serial/Model No. Eff	Serial/Model No. Disc	Qty	1 2 3 4 5	Description
1-1	366-1064-00			1		KNOB, gray--LEVEL/SLOPE
	- - - - - -			-		knob includes:
	213-0153-00			1		SETSCREW, 5-40 x 0.125 inch, HSS
-2	354-0342-00			1		RING, knob skirt
	311-0972-00			1		RESISTOR, variable
	- - - - - -			-		resistor includes:
-3	- - - - - -			1		RESISTOR, variable (See R146 & S146 EPL)
-4	214-1235-00			1		DRIVE, turns reduction
						(attaching parts)
	210-0978-00			1		WASHER, flat, 0.375 ID x 0.50 inch OD
-5	210-0590-00			1		NUT, hex., 0.375-32 x 0.312 inch
						- - - * - - -
-6	366-1077-00			1		KNOB, gray--POSITION
	- - - - - -			-		knob includes:
	213-0153-00			1		SETSCREW, 5-40 x 0.125 inch, HSS
-7	366-1319-00			1		KNOB, gray--FINE
	- - - - - -			-		knob includes:
	213-0239-00			1		SETSCREW, 3-48 x 0.062 inch, HSS
-8	- - - - - -			1		RESISTOR, variable
						(attaching parts)
-9	210-0465-00			1		NUT, hex., 0.25-32 x 0.375 inch
-10	210-0583-00			1		NUT, hex., 0.25-32 x 0.312 inch
						- - - * - - -
-11	- - - - - -			1		RESISTOR, variable
						(attaching parts)
-12	220-0420-00			1		NUT, adapter, 0.50 inch hex.
						- - - * - - -
-13	670-1139-04			1		CIRCUIT BOARD ASSEMBLY--DISPLAY MODE
	- - - - - -			-		circuit board assembly includes:
	380-0153-01			1		HOUSING, light
						(attaching parts)
	213-0181-00			1		SCREW, thread forming, #2 x 0.375 inch, PHS
						- - - * - - -

FIGURE 1 EXPLODED (cont)

Fig. & Index No.	Tektronix Part No.	Serial/Model No. Eff	Serial/Model No. Disc	Qty	Description
1-	131-0589-00			7	TERMINAL, pin, 0.46 inch long
					(attaching parts)
-14	211-0156-00			1	SCREW, 1-72 x 0.25 inch, 82 deg. csk, FHS
					- - - * - - -
-15	352-0157-00			1	HOLDER, lamp
-16	378-0602-00			1	LENS, lamp
-17	200-0935-00			1	CAP, lampholder
-18	670-1140-02			1	CIRCUIT BOARD ASSEMBLY--MODE (Triggering)
	- - - - - -			-	circuit board assembly includes:
	380-0156-03			1	HOUSING, light
					(attaching parts)
	213-0181-00			1	SCREW, thread forming, #2 x 0.375 inch, PHS
					- - - * - - -
-19	136-0263-03			20	SOCKET, pin terminal
-20	131-0608-00			18	TERMINAL, pin, 0.365 inch long
-21	386-1635-00			2	SUPPORT, circuit board, for 0.118" board h
					(attaching parts)
-22	211-0156-00			2	SCREW, 1-72 x 0.25 inch, 82 deg. csk, FHS
					- - - * - - -
-23	670-1146-01			1	CIRCUIT BOARD ASSEMBLY--COUPLING (Triggering)
	- - - - - -			-	circuit board assembly includes:
-24	386-1557-00			2	SUPPORT, circuit board, for 0.47" board h
	380-0155-02			1	HOUSING, light
					(attaching parts)
	213-0181-00			1	SCREW, thread forming, #2 x 0.375 inch, PHS
					- - - * - - -
-25	131-0608-00			4	TERMINAL, pin, 0.365 inch long
-26	136-0327-00			13	SOCKET, pin terminal
-27	131-0590-00			86	TERMINAL, pin, 0.71 inch long
					(attaching parts)
-28	211-0156-00			2	SCREW, 1-72 x 0.25 inch, 82 deg. csk, FHS
					- - - * - - -
-29	670-1145-01			1	CIRCUIT BOARD ASSEMBLY--SOURCE (Triggering)
	- - - - - -			-	circuit board assembly includes:
-30	386-1559-00			2	SUPPORT, circuit board, for 0.28" board h
	380-0155-02			1	HOUSING, light
					(attaching parts)
	213-0181-00			1	SCREW, thread forming, #2 x 0.375 inch, PHS
					- - - * - - -
-31	136-0327-01			10	SOCKET, pin terminal
					(attaching parts)
-32	211-0156-00			2	SCREW, 1-72 x 0.25 inch, 82 deg. csk, FHS
					- - - * - - -
-33	670-1107-02			1	CIRCUIT BOARD ASSEMBLY--MAGNIFIER
	- - - - - -			-	circuit board assembly includes:
	380-0148-01			1	HOUSING, light
					(attaching parts)
	213-0181-00			1	SCREW, thread forming, #2 x 0.375 inch, PHS
					- - - * - - -

FIGURE 1 EXPLODED (cont)

Fig. & Index No.	Tektronix Part No.	Serial/Model No. Eff	Disc	Qty	Description 1 2 3 4 5
1-34	131-0589-00			6	TERMINAL, pin, 0.46 inch long
					(attaching parts)
-35	211-0156-00			1	SCREW, 1-72 x 0.25 inch, 82 deg. csk, FHS
					- - - * - - -
-36	366-1189-00			1	KNOB, gray--VARIABLE
	- - - - - -			-	knob includes:
	213-0153-00			1	SETSCREW, 5-40 x 0.125 inch, HSS
-37	- - - - - -			1	RESISTOR, variable
					(attaching parts)
-38	210-0583-00			2	NUT, hex., 0.25-32 x 0.312 inch
					- - - * - - -
-39	- - - - - -			1	RESISTOR, variable
					(attaching parts)
	210-0046-00			2	WASHER, lock, internal, 0.261 ID x 0.40" OD
-40	129-0252-00			1	POST, metallic, 0.45 x 0.312 hex., 0.25-32
	- - - - - -			-	thread thru
-41	358-0409-00			1	BUSHING, machine thread
					- - - * - - -
-42	358-0301-02			1	BUSHING, sleeve, front panel trim
-43	131-0106-01			1	CONNECTOR, coaxial, 1 contact, BNC, female,
	- - - - - -			-	w/hardware
-44	366-1103-00			1	KNOB, gray--TIME/DIV
	- - - - - -			-	knob includes:
	213-0020-00			2	SETSCREW, 6-32 x 0.125 inch, HSS
-45	366-1166-00			1	KNOB, red--VARIABLE (CAL IN)
	- - - - - -			-	knob includes:
	213-0153-00			1	SETSCREW, 5-40 x 0.125 inch, HSS
-46	384-0490-00			1	SHAFT, extension, 5.93 inches long
-47	670-1137-03			1	CIRCUIT BOARD ASSEMBLY--INTERFACE
	- - - - - -			-	circuit board assembly includes:
	105-0411-00			1	ACTUATOR ASSEMBLY
	- - - - - -			-	actuator assembly includes:
-48	200-0963-00			1	COVER, cam switch
-49	211-0022-00			4	SCREW, 2-56 x 0.188 inch, PHS
-50	210-0405-00			4	NUT, hex., 2-56 x 0.188 inch
-51	210-0001-00			4	WASHER, lock, internal, #2
-52	354-0219-00			1	RING, retaining
-53	214-1127-00			1	ROLLER, detent
-54	214-1139-00[1]			-	SPRING, flat, gold
	214-1139-02[1]			-	SPRING, flat, green
	214-1139-03[1]			-	SPRING, flat, red
-55	407-0653-00			1	BRACKET, support
-56	105-0122-00			1	DRUM ASSEMBLY--TIME/DIV
-57	401-0057-00			1	BEARING, front
-58	401-0056-00			1	BEARING, rear
-59	210-0406-00			6	NUT, hex., 4-40 x 0.188 inch
					(attaching parts)
-60	211-0116-00			6	SCREW, 4-40 x 0.312 inch, PHB
					- - - * - - -

[1]Replace only with part bearing the same color code as the original part in your instrument.

FIGURE 1 EXPLODED (cont)

Fig. & Index No.	Tektronix Part No.	Serial/Model No. Eff	Disc	Qty	1 2 3 4 5	Description
1-61	351-0180-00			1		GUIDE, actuator
-62	214-1136-00			1		SLIDE, actuator
-63	131-0566-00			22		LINK, terminal connector
-64	131-0593-00			9		TERMINAL, pin, 1.15 inches long
-65	131-0590-00			77		TERMINAL, pin, 0.67 inch long
-66	131-0608-00			10		TERMINAL, pin, 0.365 inch long
	131-0665-00			1		TERMINAL, pin, 0.88 inch long
-67	351-0155-00			8		GUIDE, terminal lead
-68	351-0185-00			4		GUIDE-POST, lock
-69	351-0183-00			6		GUIDE-POST, lock
						(attaching parts)
-70	220-0547-01			5		NUT BLOCK
-71	211-0116-00			5		SCREW, sems, 4-40 x 0.312 inch, PHB
-72	211-0105-00			5		SCREW, 4-40 x 0.188 inch, 100 deg. csk, FHS
						- - - * - - -
-73	348-0067-00			1		GROMMET, plastic, 0.312 inch diameter
-74	670-1138-04			1		CIRCUIT BOARD ASSEMBLY--TIME BASE
	- - - - - -			-		circuit board assembly includes:
-75	214-0579-00			22		TERMINAL, test point
-76	136-0337-00			1		SOCKET, relay, 8 pin
-77	136-0220-00			27		SOCKET, transistor, 3 pin, square
-78	136-0235-00			1		SOCKET, transistor, 6 pin
-79	136-0263-03			37		SOCKET, pin terminal
-80	131-0608-00			4		TERMINAL, pin, 0.365 inch long
	200-0945-00			1		COVER, half, transistor, temp stabilizer,
	- - - - - -			-		dual
	200-0945-01			1		COVER, half, transistor, temp stabilizer,
	- - - - - -			-		dual, threaded
	211-0062-00			1		SCREW, 2-56 x 0.312 inch, RHS
-81	211-0155-00			5		SCREW, 4-40 x 0.081 inch, knurled
-82	361-0238-00			5		SPACER, sleeve
-83	388-1431-00			1		CIRCUIT BOARD, shield (Triggering)
	388-1639-00			1		CIRCUIT BOARD, shield (TIME BASE, not shown)
-84	670-1136-05			1		CIRCUIT BOARD ASSEMBLY--TRIGGER
	- - - - - -			-		circuit board assembly includes:
	200-0945-00			2		COVER, half, transistor, temp stabilizer,
	- - - - - -			-		dual
	200-0945-01			2		COVER, half, transistor, temp stabilizer,
	- - - - - -			-		dual, threaded
-85	136-0220-00			9		SOCKET, transistor, 3 pin, square
-86	136-0337-00			3		SOCKET, relay, 8 pin
-87	136-0237-00			3		SOCKET, transistor, 8 pin
-88	136-0263-03			26		SOCKET, pin terminal
-89	136-0350-00			33		SOCKET, transistor, 3 pin
-90	214-0579-00			11		TERMINAL, test point
-91	211-0155-00			5		SCREW, 4-40 x 0.081 inch, knurled
-92	361-0238-00			5		SPACER, sleeve
-93	214-1140-00			10		SPRING, helical compression
	131-0937-00			2		TERMINAL, lug (not shown)
-94	348-0235-00			2		SHIELDING GASKET

FIGURE 1 EXPLODED (cont)

Fig. & Index No.	Tektronix Part No.	Serial/Model No. Eff	Disc	Qty	1 2 3 4 5	Description
1-95	670-1144-00			1		CIRCUIT BOARD ASSEMBLY--EXTERNAL INPUT
	- - - - - -			-		circuit board assembly includes:
-96	337-1270-00			1		SHIELD
-97	131-0608-00			6		TERMINAL, pin, 0.365 inch long
-98	136-0252-01			6		SOCKET, pin connector
	136-0252-04			25		SOCKET, pin connector
	200-0945-00			1		COVER, half, transistor, temp stabilizer,
	- - - - - -			-		dual
	200-0945-01			1		COVER, half, transistor, temp stabilizer,
	- - - - - -			-		dual, threaded
	211-0062-00			1		SCREW, 2-56 x 0.312 inch, RHS
						(attaching parts)
-99	131-0907-00			1		CONTACT, electrical ground
-100	407-0748-00			1		BRACKET
						- - - * - - -
-101	344-0131-00			1		CLIP, circuit board
-102	211-0116-00			1		SCREW, sems, 4-40 x 0.312 inch, PHB
	210-0406-00			1		NUT, hex., 4-40 x 0.188 inch
-103	352-0213-00			1		HOLDER, cable
-104	386-1657-00			8		SUPPORT, circuit board, for 0.185" board h
-105	131-0664-00			1		CONTACT, electrical, shaft ground
						(attaching parts)
-106	211-0101-00			1		SCREW, 4-40 x 0.25 inch, 100 deg. csk, FHS
	210-0586-00			1		NUT, keps, 4-40 x 0.25 inch
						- - - * - - -
-107	366-1058-10			1		KNOB, latch
-108	214-1095-00			1		PIN, spring split
-109	105-0076-00			1		RELEASE BAR, latch
-110	214-1280-00			1		SPRING, helical extension
-111	105-0075-00			1		BODY, latch
-112	214-1054-00			1		SPRING, flat, latch detent
-113	333-1260-00			1		PANEL, front
-114	386-1447-13			1		SUBPANEL, front
-115	386-1402-00			1		PANEL, rear
-116	214-1061-00			1		SPRING, flat, sliding, ground
-117	426-0505-04			1		FRAME SECTION, top
-118	426-0499-04			1		FRAME SECTION, bottom
-119	213-0192-00			8		SCREW, thread forming, 6-20 x 0.50 inch,
	- - - - - -			-		Fil HS
	361-0326-00			1		SPACER, sleeve, 0.10 inch long
-120	337-1064-04			2		SHIELD, electrical
-121	214-1190-00			1		EXTENDER-RETRACTOR, knob
-122	407-0553-00			1		BRACKET, variable resistor
	361-0326-00			1		SPACER, sleeve, 0.10 inch long
-123	- - - - - -			1		RESISTOR, variable
						(attaching parts)
-124	210-0583-00			1		NUT, hex., 0.25-32 x 0.312 inch
						- - - * - - -

FIGURE 1 EXPLODED (cont)

Fig. & Index No.	Tektronix Part No.	Serial/Model No. Eff	Serial/Model No. Disc	Qty	1 2 3 4 5	Description
1-125	344-0244-00			2		CLIP, component mounting
						(attaching parts for each)
	361-0007-00			1		SPACER, plastic
						- - - * - - -
-126	175-0825-00			ft		WIRE, electrical, 2 wire ribbon, 6.25" long
-127	175-0827-00			ft		WIRE, electrical, 4 wire ribbon, 11.50" long
-128	175-0828-00			ft		WIRE, electrical, 5 wire ribbon, 2.50" long
-129	175-0829-00			ft		WIRE, electrical, 6 wire ribbon, 5" long
-130	175-0831-00			ft		WIRE, electrical, 8 wire ribbon, 4" long
-131	352-0171-00			6		HOLDER, terminal connector, 1 wire
-132	352-0169-00			3		HODLER, terminal connector, 2 wire
-133	352-0162-00			2		HOLDER, terminal connector, 4 wire
-134	352-0163-00			2		HOLDER, terminal connector, 5 wire
-135	352-0164-00			1		HOLDER, terminal connector, 6 wire
-136	352-0166-00			1		HOLDER, terminal connector, 8 wire
-137	131-0707-00			43		CONNECTOR, terminal, (for large wire)
	131-0708-00			1		CONNECTOR, terminal, (for small wire)
	131-0755-00			6		CONNECTOR, terminal, (for small wire)
-138	131-0512-00			6		CONNECTOR, terminal, coaxial cable

FIG. 1 EXPLODED

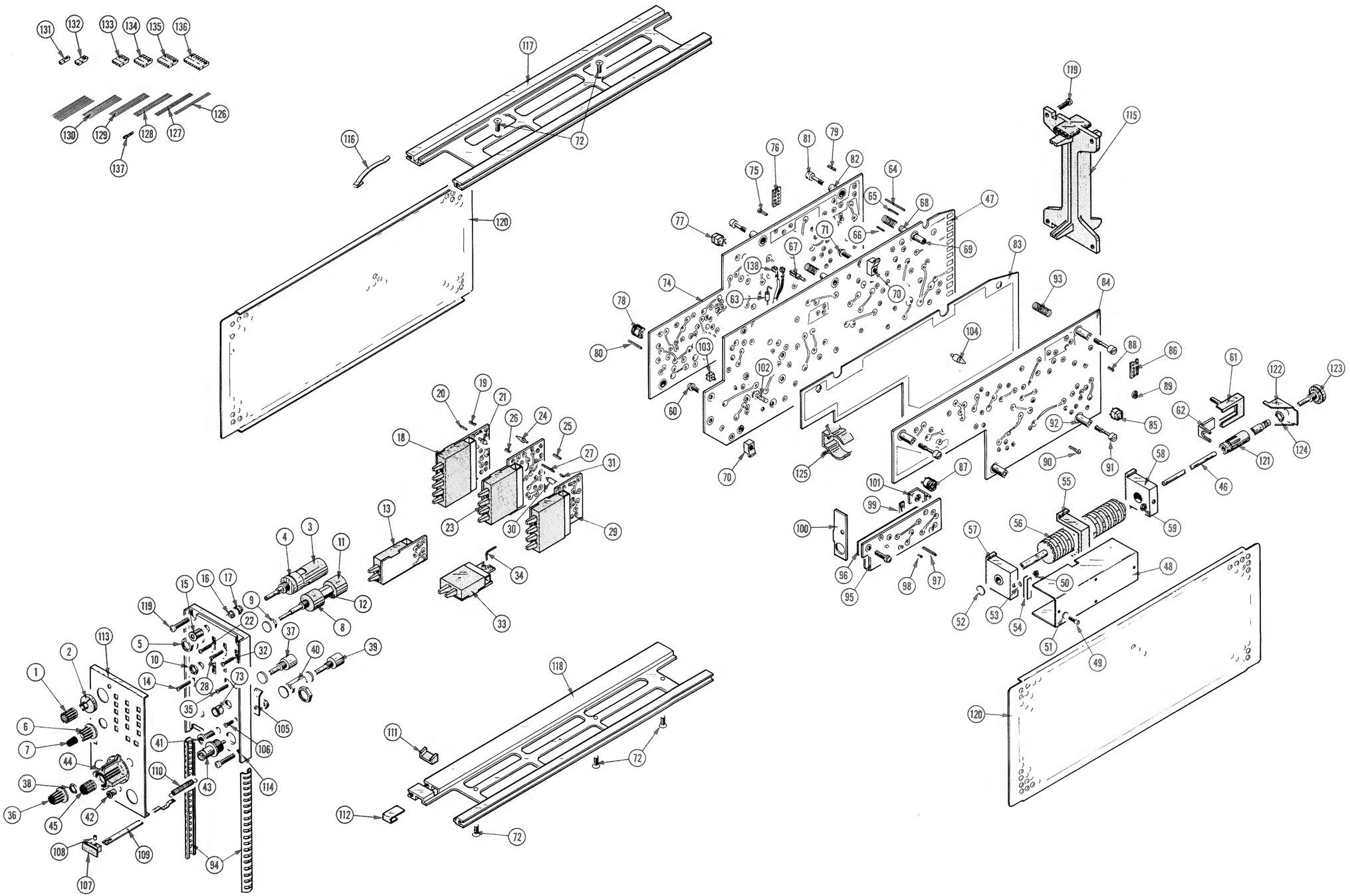

7B70 TIME BASE (B205000 up)

FIG. 2 ACCESSORIES & REPACKAGING

ACCESSORIES

Fig. & Index No.	Tektronix Part No.	Serial/Model No. Eff	Disc	Qty	1 2 3 4 5	Description
2-	070-1579-00			1		MANUAL, instruction (B205000 up)

REPACKAGING

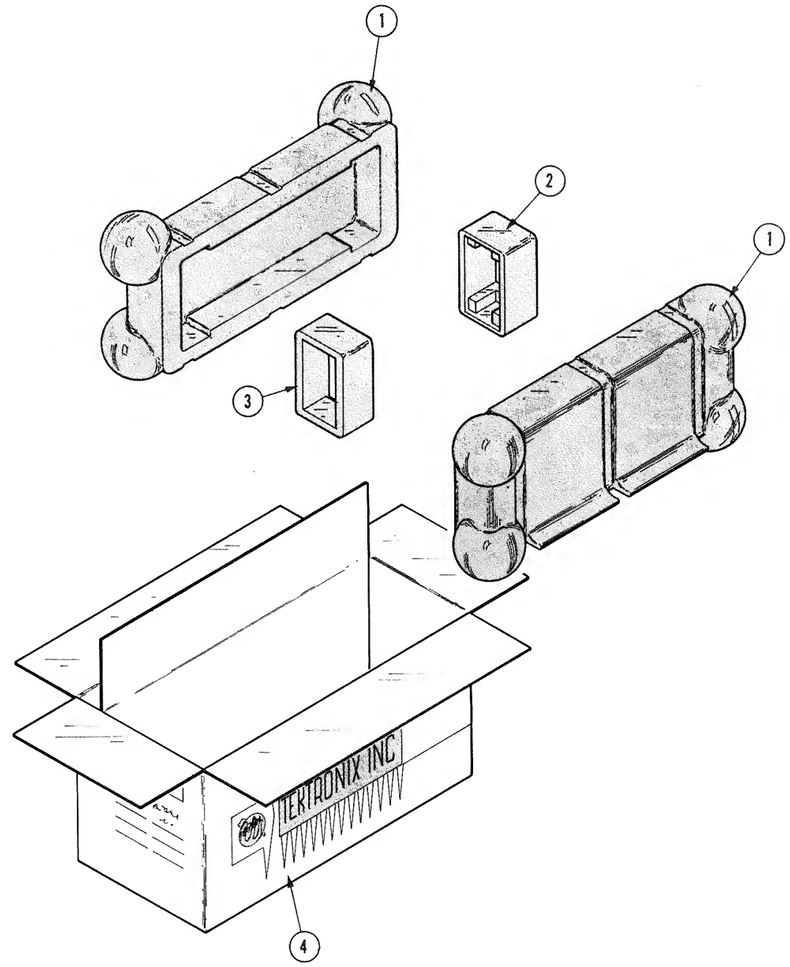

Fig. & Index No.	Tektronix Part No.	Serial/Model No. Eff	Disc	Qty	1 2 3 4 5	Description
2-	065-0125-00			1		CARTON ASSEMBLY
	- - - - - - - - - -			-		carton assembly incl:
-1	004-0241-00			2		CASE HALF
-2	004-0242-00			1		END CAP, rear
-3	004-0243-00			1		END CAP, front
-4	004-0748-00			1		CARTON

MANUAL CHANGE INFORMATION

At Tektronix, we continually strive to keep up with latest electronic developments by adding circuit and component improvements to our instruments as soon as they are developed and tested.

Sometimes, due to printing and shipping requirements, we can't get these changes immediately into printed manuals. Hence, your manual may contain new change information on following pages.

A single change may affect several sections. Sections of the manual are often printed at different times, so some of the information on the change pages may already be in your manual. Since the change information sheets are carried in the manual until ALL changes are permanently entered, some duplication may occur. If no such change pages appear in this section, your manual is correct as printed.